SAP Communication: Configuration (BC-SRV)

HELP.BCSRVSKCF

Release 4.6C

SAP™

Copyright

Icons

Icon	Meaning
	Caution
	Example
	Note
	Recommendation
	Syntax

Inhalt

SAP Communication: Configuration (BC-SRV)

SAP Communication: Configuration (BC-SRV)

This subject area is aimed at system and network administrators. You will learn about the configurations necessary for SAP Systems (R/3 or R/2) to be able to communicate with each other and with external programs and systems.

The configuration depends upon the system platforms in use and the constellation. You will receive guidance on this in the second topic “Configurations Overview”.

For information on CPI-C programming, refer to the following documentation:
BC - SAP Communication: Programming [Extern]

For information on RFC-based programming, refer to the following documentation:
Remote Communications [Extern]

SAP Communication

This chapter explains basic terms and discusses communication in various forms of the SAP environment.

SAP Interfaces

Purpose

SAP program interfaces simplify and standardize communication between different systems and/or programs.

SAP communication interfaces exist at various levels. They are described in the following. The main subject of this documentation is the SAP communication interface CPI-C.

The following SAP communications interfaces are available:

- Communications Basis CPI-C [Seite 11]
- Remote Function Call (RFC) [Seite 13]
- Queue Application Programming Interface (Q-API) [Seite 14]

Communications Basis CPI-C

Definition

The *Common Programming Interface - Communications* (CPI-C) is a standard call interface for applications, which perform direct program-to-program communication.

CPI-C was first defined as a standardized communications interface by IBM in 1987, as part of the SAA standard.

CPI-C was modified by *X/Open* to include additional functions. SAP's CPI-C implementations support the *X/Open Developers' Specification - CPI-C*.

The main advantage of CPI-C is the easy portability of programs to various system platforms made possible by the common interface.

Use

The CPI-C communications interface essentially fulfills the following requirements of program-to-program communication:

- Communication setup
- Data exchange
- Data conversion (ASCII ↔ EBCDIC)
- Communication control
- Communication close

Structure

The CPI-C interface can be split into two function groups. This division does not, however, imply limitations in respect of possibilities to use and combine the functions. The function groups are there merely to guide the user:

- CPI-C Starter Set
- Advanced Function Calls

CPI-C Starter Set

These basic functions represent the minimum range of functions shared by two partner programs:

- Establishing a connection
- Data exchange
- Closing a connection

As these are the basic functions of a communication protocol, it is possible to reproduce the *CPI-C Starter Set* on protocols other than LU6.2.

The SAP CPI-C development library *cpictlib* is an example of mapping to TCP/IP.

Advanced Function Calls

These advanced functions essentially cover the following task areas:

- Data Conversion
- Synchronization and control
- Changes in communication characteristics
- Checking of communication characteristics
- Security functions

Integration

The CPI-C interface is available for both C and ABAP programs.

CPI-C Development Libraries

Function call interfaces for the C language.

These platform-specific and protocol-dependent libraries implement a series of function calls of the CPI-C communications interface. They also include SAP-specific function calls.

Function calls from the corresponding library enable communication between an external program and an ABAP program or an external program.

See also CPI-C interface in C [Extern].

CPI-C Interface in ABAP

This is the function call interface for ABAP.

It implements some function calls of the CPI-C interface.

This interface allows an ABAP program to communicate with an ABAP program from another SAP system (R/2 or R/3) or with a non-SAP program.

Further details are available in the section on CPI-C Implementation in ABAP [Extern].

A detailed description of the CPI-C interface is provided in the documentation on BC - SAP Communication: CPI-C Programming [Extern].

Remote Function Call (RFC)

Definition

This interface is logically above CPI-C. It simplifies the implementation of communication processes by relieving the programmer of the task of writing his own communication routines.

Use

The RFC interface enables function calls between two SAP systems (R/3 or R/2), or between an SAP system and an external one. The RFC library functions support the C programming language and Visual Basic (on Windows platforms).

In the case of asynchronous RFC, calls are also transmitted to remote systems when the target system is not active or momentarily cannot be reached (analog to Q-API).

For more details on this interface, refer to the following documentation:

Remote Communications [Extern]

Queue Application Programming Interface (Q-API)

Definition

Q-API is an interface for buffered data transfer. Data is transferred to the partner system using CPI-C.

This is a set of functions, which places the data temporarily in a database queue, to be processed later by a program running asynchronously.

Use

This SAP interface allows asynchronous data exchange between two systems (R/3, R/2 or an non-SAP system).

As of R/3 Release 3.0 you can use the transactional RFC for buffered data transfer.

The transactional RFC is not supported in R/2.

Communication in a TCP/IP Environment

In the following constellations, program-to-program communication is based on the TCP/IP transport protocol:

- R/3 ↔ R/3
- R/3 ↔ Non-SAP Program

  For non-SAP programs, SAP provides the platform-specific development library *cpictlib*.
- R/3 (or non-SAP program) ↔ R/2 in BS2000

  The SAP Gateway runs under *DCAM* (from V11) with *TCP/IP* and the Socket interface on the BS2000 host.

In all of these constellations, the SAP Gateway [Seite 40] (CPI-C Handler) is required.

For information on hardware and software supported, refer to the following brochure: *SAP-Supported Network Products*

Communication in an IBM Host Environment (SNA)

Definition

A logical connection (Session [Extern]**Error! No bookmark name given.**) between two LUs (Logical Unit [Extern]**Error! No bookmark name given.**) is necessary for communication in a homogeneous SNA network. The SNA protocol LU6.2 is used when two application programs are to communicate via a session of this type. Active communication is known as a conversation [Extern].

A *conversation* between programs, which use different interfaces for the LU6.2 function calls, is possible.

Examples of such interfaces are:

- CPI-C, APPC [Extern], EXEC CICS...

One of the most important characteristics of the LU6.2 [Extern] protocol is that a transaction program [Extern] can call up a partner program on another system (Attach function). This allows connections to be set up dynamically and event-orientated data exchange between the two partners.

Integration

SAP offers a platform-specific development library for workstations which communicate with an R/2 SNA system.

A platform-specific SNA communications subsystem must be installed and properly configured on the workstation:

- SNAplusLink (HP)
- SNA Server (IBM)
- Transit (SNI)
- SNA Server (WindowsNT)

Communication between the workstation and host generally takes place via the SAP Gateway [Seite 40] (CPI-C Handler).

For information on hardware and software supported, refer to the following brochure: *SAP - Supported Network Products*.

Communication in a BS2000 Host Environment

Definition

As in the SNA world, a session [Extern] between two network users is used as a medium for data interchange.

In a BS2000 environment, program-to-program communication is possible with the following constellations:

- UTM on both partner systems

  A conversation [Extern] between two programs is based on UTM-D.

- DCAM with the SAP Gateway on the BS2000 host

  In addition to an R/3 System, any external system can communicate with the R/2 System via the SAP Gateway [Seite 40] and DCAM, providing the following requirements are met:

  – TCP/IP support

  – SAP communication interfaces (function libraries *cpictlib* or *librfc*)

  The SAP Gateway allows communication both with an UTM R/2 System and with a DCAM R/2 System.

For information on hardware and software supported, refer to the following brochure: *SAP - Supported Network Products*.

Detailed documentation on the SAP Gateway for BS2000 is supplied with the gateway, in the SAPGW.README file.

Configurations Overview

Various constellations are possible for communication between programs within the SAP world (R/2 and R/3), and between SAP programs and external programs.

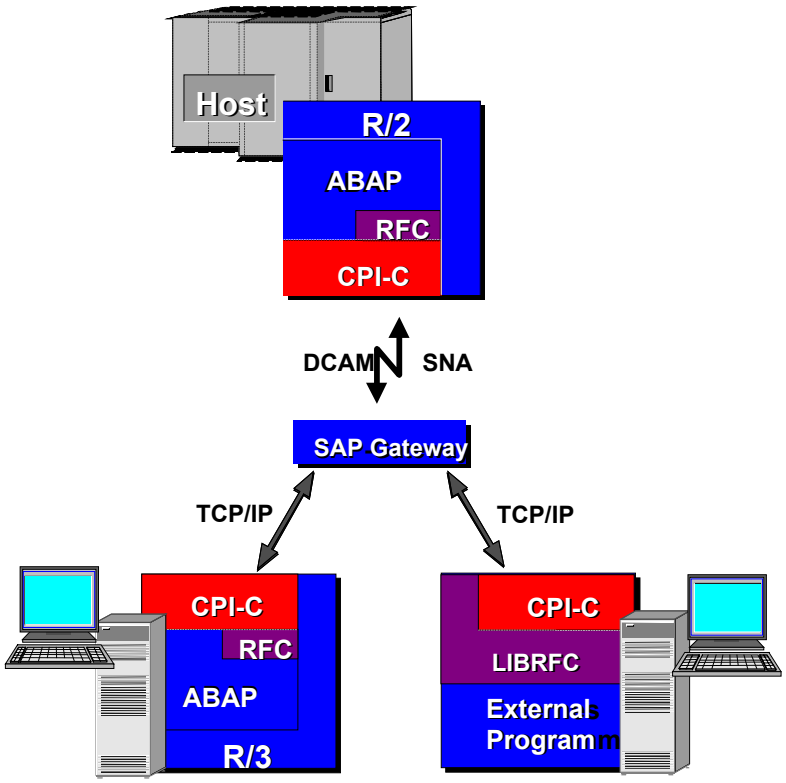

Communication is based on various protocols, depending on constellation:

- SNA LU6.2
- TCP/IP

If the R/2 host is a BS2000 System, the SAP Gateway runs under DCAM in BS2000 and communicates with R/3 or an external program on the basis of TCP/IP.

The SAP Gateway (CPI-C Handler) is always necessary for communication via one of the interfaces implemented by SAP.

The following constellations are possible:

Communication Between two R/3 Systems [Seite 20]

Communication Between R/3 and R/2 (MVS/VSE) [Seite 21]

Communication Between R/3 and R/2 (BS2000) [Seite 25]

Communication Between R/3 and External Programs [Seite 28]

Communication Between R/2 Systems [Seite 31]

Communication Between R/2 (MVS/VSE) and External Programs [Seite 32]

Communication Between R/2 (BS2000) and External Programs [Seite 36]

Communication Between two C Programs [Seite 39]

Communication Between R/3 Systems

An ABAP program of an R/3 System starts an ABAP program on another R/3 System and exchanges data with this program.

The configuration requirements for this constellation are:

- There must be an active SAP Gateway.

  It can be located on the calling system or the system that is called.

  For more details, refer to the following section SAP Gateway [Seite 40].

- The connection parameters must be configured.

  RFC connections:

  – Maintain the RFC Destination. For this, use transaction code SM59.

  CPI-C connections:

  – You must configure table TXCOM in the R/3 System initiating communication. For this, use transaction code SM54.

    For more details, refer to the section “Side InfoTables” in the topic Side Information in R/3: TXCOM [Seite 115]

  – The *sideinfo* file does not have to be configured. The values of table TXCOM are copied.

- The hosts and services involved must be configured in the TCP/IP network.

  For more details, refer to the following section Hosts and Services in the TCP/IP Network [Seite 209].

Communication Between R/3 and R/2 (MVS/VSE)

The following topics provide an overview about the configuration steps you must perform on the partner systems.

The configuration steps you must perform depend on whether the calling system is R/3 or R/2.

From R/3 to R/2 [Seite 22]

From R/2 to R/3 [Seite 23]

As of R/2 Release 5.0D, you can also use an RFC call instead of a CPI-C call.
The following limitation applies to an MVS/VSE host:

- CICS only as the DC system (at present)
- IMS as of Version 4.1 for complete LU6.2 support

From R/3 to R/2

Prerequisites

The configuration requirements for this constellation are:

- The MVS/VSE host must be configured.

  For more details, refer to the following section MVS/VSE Host Systems [Seite 118].

- There must be an SNA communication subsystem. This must be configured.

  For more details, refer to the following section Commnications Subsystems for SNA [Seite 139].

- There must be an active SAP Gateway that supports SNA.

  For more details, refer to the following section SAP Gateway [Seite 40].

- The connection parameters must be configured.

  RFC connections:

  – Maintain the RFC Destination. For this, use transaction code SM59.

  CPI-C connections:

  – You must configure table TXCOM in the R/3 System initiating communication. For this, use transaction code SM54.

    For more details, refer to the section “Side InfoTables” in the topic Side Information in R/3: TXCOM [Seite 115]

  – The *sideinfo* file must be configured on the SNA Gateway host.

    For more details, refer to the section “Side InfoTables” in the topic Side Information on OS/2, Windows NT, UNIX and AS/400 Platforms: Sideinfo [Seite 114]

Process flow

The SAP Gateway sets up connections to R/2 on the MVS or VSE host via LU6.2. For this, it uses services of the SNA communication subsystem. Several communication requests can be handled via a SAP Gateway.

From R/2 to R/3

Purpose

An ABAP program of an R/2 System under MVS or VSE can start the following target programs via a communication program:

- ABAP programs of an R/3 System
- C programs on a computer that does not have to be known in the SNA network

Prerequisites

Depending on the DC System that you are using on the R/2 host, one of the two R/2 communication programs provided by SAP is required on the gateway computer with the SNA subystem:

- *gwhost* for CICS
- *gwims* for IMS

The configuration requirements for this constellation are:

- There must be an active SAP Gateway.

  For more details, refer to the following section SAP Gateway [Seite 18].

- There must be an SNA communication subsystem. This must be configured.

  For more details, refer to the following section Communications Subsystems for SNA [Seite 139].

- The R/2 table XCOM must be configured.

  The TP name of table XCOM must correspond to the name of the communication program on the SNA gateway platform.

  For more details, refer to the topic Side Information in R/2 on MVS/VSE Host: XCOM [Seite 111] (section “Side Info Tables”)

- Using the RFC interface:
  - The side info table RFCD must be configured.
  - The destination of the function call must match the corresponding entry in XCOM and RFCD.

- A *sideinfo* side info table must be configured on the SNA subsystem platform.

Process flow

1. The R/2 ABAP program starts the communications program on the SNA Gateway platform. The communications program is identified via the R/2 table XCOM.
2. The communication program sets up a *Conversation* with the SAP Gateway. In the course of this, the SAP Gateway is identified via a side info file. The computer on which it is located does not have to be known in the SNA network.
3. The SAP Gateway starts the actual target program.

From R/2 to R/3

The communications program merely passes on the data during the CPI-C dialog.

The communication program reads the parameters necessary for setting up the connection with the SAP Gateway and for starting the actual target program from the side info file. The communication program must be known to the respective SNA subsystem.

For more details, refer to the section “Side InfoTables” in the topic Parameters on SNA Subsystem Platforms in R/2 [Seite 105].

Communication Between R/3 and R/2 (BS2000)

Purpose

The following topics provide an overview about the configuration steps you must perform on the partner systems.

The configuration steps you must perform depend on whether the calling system is R/3 or R/2.

From R/3 to R/2 [Seite 26]

From R/2 to R/3 [Seite 27]

As of R/2 Release 5.0D, you can also use an RFC call instead of a CPI-C call.

From R/3 to R/2

Purpose

An ABAP program of an R/3 System starts an ABAP program of an R/2 System under DCAM or UTM in the BS2000 host and exchanges data with this program via CPI-C.

Prerequisites/Procedure

The configuration requirements for this constellation are:

- The BS2000 host must be configured.

  For more details, refer to the section BS2000 Host Systems [Seite 190].

- The SAP Gateway must be installed and configured in BS2000 under DCAM.

  For more details, refer to the section SAP Gateway under BS2000 [Seite 46].

- The connection parameters must be configured.

  RFC connections:

  – Maintain the RFC Destination. For this, use transaction code SM59.

  CPI-C connections:

  – You must configure table TXCOM in the R/3 System (and on the gateway host) initiating communication. For this, use transaction code SM54.

    For more details, refer to the section “Side InfoTables” in the topic Side Information in R/3: TXCOM [Seite 115]

From R/2 to R/3

Purpose

You can start an ABAP program in an R/3 System or a C program on a UNIX computer from an R/2 System on the BS2000 host. This is made possible by the SAP communication program *gwhost*.

Prerequisites

The configuration requirements for this constellation are:

- The SAP Gateway on the UNIX platform must be configured.

  For more details, refer to the section SAP Gateway under OS/2, UNIX and WindowsNT [Seite 41].

- The R/2 table XCOM and the side info file SAPGW.DATA.SIDEINFO must be configured.
- The job SAPGWHO identifies the logical target description DEST of the side info file SAPGW.DATA.SIDEINFO via the TP parameter of table XCOM.

  For more details, refer to the following topics:

  – Side Information in R/2 on BS2000 Host: XCOM [Seite 112] (section “Side Info Tables”) under “Parameters for GWHOST Connections”

  – Maintaining the Side Info File in BS2000 [Seite 204] under “Connection Setup by the R/2 System” (Section “BS2000 Host Systems”)

- The hosts and services involved must be configured in the TCP/IP network.

  For more details, refer to the following section Configuration for a TCP/IP Connection [Seite 199] (section “BS2000 Host Systems”).

Process flow

The process is as follows:

1. The R/2 ABAP program starts the job SAPGWHO (communication program *gwhost*). The job SAPGWHO identifies the appropriate entry in the side info file SAPGW.DATA.SIDEINFO via the R/2 table XCOM.
2. The job SAPGWHO sets up the connection to an SAP Gateway on a UNIX computer (not under BS2000). In the course of this, the SAP Gateway is identified via the side info file.
3. The SAP Gateway starts the actual target program.

Communication Between R/3 and an External Program

Purpose

The following topics provide an overview about the configuration steps you must perform in the R/3 System and on the partner computer.

The configuration steps you must perform depend on whether the R/3 is the calling or the called system.

From R/3 to an External Program [Seite 29]

From an External Program to R/3 [Seite 30]

From R/3 to an External Program

Purpose

An ABAP program of an R/3 System starts a non-SAP program on another computer and exchanges data with this program.

Prerequisites/Procedure

The configuration requirements for this constellation are:

- There must be an active SAP Gateway.
  It can be located on the calling system or the system that is called.

  For more details, refer to the following section SAP Gateway [Seite 40].

- The connection parameters must be configured.

  RFC connections:

  – Maintain the RFC Destination. For this, use transaction code SM59.

  CPI-C connections:

  – You must configure table TXCOM in the R/3 System initiating communication. For this, use transaction code SM54.

  For more details, refer to the section “Side InfoTables” in the topic Side Information in R/3: TXCOM [Seite 115]

- The *sideinfo* file does not have to be configured. The values of table TXCOM are copied.

- The hosts and services involved must be configured in the TCP/IP network.

  For more details, refer to the following section Hosts and Services in the TCP/IP Network [Seite 209].

From an External Program to R/3

Purpose

A C program starts an ABAP program on another R/3 System and exchanges data with the ABAP program.

Prerequisites/Procedure

The configuration requirements for this constellation are:

- There must be an active SAP Gateway.

  For more details, refer to the following section SAP Gateway [Seite 40].

- The connection parameters must be configured.

  The side information file must contain target system and platform-dependent entries.

  The entries must have the following structure:

  ```
  DEST=<Symbolic Destination>
  PROTOCOL=I
  GWHOST=<Host of the SAP Gateway>
  GWSERV=<Gateway Service>
  ```

  For more details, refer to the topic Side Information on OS/2, Windows NT, UNIX and AS/400 Platforms: Sideinfo [Seite 114] (section “Side Info Tables”)

- The hosts and services involved must be configured in the TCP/IP network.

For more details, refer to the section Hosts and Services in the TCP/IP Network [Seite 209].

Communication Between R/2 Systems

Purpose

The following topics provide an overview about the configuration steps you must perform on the partner systems.

As of R/2 Release 5.0D, you can also use an RFC call instead of a CPI-C call.

If you use RFC, the side info tables XCOM and RFCD must be configured with matching destination entries.

R/2 on MVS/VSE Host

Communication between R/2 Systems is only possible on MVS/VSE hosts if CICS is used as the data communications system. Local communication on an R/2 host is not possible because CICS does not support a local Conversation via SNA LU6.2.

For details on configuration, refer to the following topcis:

- MVS/VSE Host Systems [Seite 118]
- Side Information in R/2 on MVS/VSE Host: XCOM [Seite 111] (section “Side Info Tables”)

R/2 on BS2000 Host

The following constellations are possible for communication between R/2 Systems on BS2000 hosts:

UTM on both Hosts

If UTM is used on both BS2000 systems, a local Conversation can be operated.

For details on configuration, refer to the following topics:

- Configuration for a UTM-UTM Connection [Seite 192] (section “BS2000 Host Systems”).
- Side Information in R/2 on BS2000 Host: XCOM [Seite 112], subsection “Parameters for UTM-UTM Connection” (section “Side Info Tables”)

DCAM on both Hosts

An R/2 System on a BS2000 host with DCAM can communicate via the SAP Gateway and DCAM with an R/2 partner system via TCP/IP.

For details on configuration, refer to the following topics:

- Configuration for a TCP/IP Connection [Seite 199] (section “BS2000 Host Systems”).
- Side Information in R/2 on BS2000 Host: XCOM [Seite 112] (section “Side Info Tables”)

Communication Between R/2 (MVS/VSE) and an External Program

Purpose

The following topics provide an overview about the configuration steps you must perform in the R/2 System and on the partner computer.

The configuration steps you must perform depend on whether the R/2 is the calling or the called system.

From R/2 to an External Program [Seite 33]

From an External Program to R/2 [Seite 35]

As of R/2 Release 5.0D, you can also use an RFC call instead of a CPI-C call.
The following limitation applies to an MVS/VSE host:

- CICS only as the DC system (at present)
- IMS as of Version 4.1 for complete LU6.2 support

From R/2 to an External Program

Purpose

An ABAP program of an R/2 System under MVS or VSE can start the following target programs via a communication program:

- ABAP programs of an R/3 System
- C programs on a computer that does not have to be known in the SNA network

Depending on the DC System that you are using on the R/2 host, one of the two R/2 communication programs provided by SAP is required on the gateway computer with the SNA subystem:

- *gwhost* for CICS
- *gwims* for IMS

Prerequisites

The configuration requirements for this constellation are:

- There must be an active SAP Gateway.

  For more details, refer to the following section SAP Gateway [Seite 40].

- There must be an SNA communication subsystem. This must be configured.

  For more details, refer to the following section Communications Subsystems for SNA [Seite 139].

- The R/2 table XCOM must be configured.

  The TP name of table XCOM must correspond to the name of the communication program on the SNA gateway platform.

  For more details, refer to the topic Side Information in R/2 on MVS/VSE Host: XCOM [Seite 111] (section “Side Info Tables”)

- A *sideinfo* side info table must be configured on the SNA subsystem platform.

  The communication program reads the parameters necessary for setting up the connection with the SAP Gateway and for starting the actual target program from the side info file. The communication program must be known to the respective SNA subsystem.

For more details, refer to the section “Side InfoTables” in the topic Parameters on SNA Subsystem Platforms in R/2 [Seite 105].

Process flow

The process is as follows:

1. The R/2 ABAP program starts the communication program on the SNA gateway platform. In the course of this, the communication program is identified via the R/2 table XCOM.
2. The communication program sets up a *Conversation* with the SAP Gateway. In the course of this, the SAP Gateway is identified via a side info file. The computer on which it is located does not have to be known in the SNA network.

From R/2 to an External Program

3. The SAP Gateway starts the actual target program.

   The communications program merely passes on the data during the CPI-C dialog.

From an External Program to R/2

Prerequisites

The configuration requirements for this constellation are:

- There must be an active SAP Gateway.

  For more details, refer to the following section SAP Gateway [Seite 40].

- The connection parameters must be configured.

  The side information file must contain target system and platform-dependent entries.

  The entries must have the following structure:

  ```
  DEST=<Symbolic Destination>
  PROTOCOL=C
  GWHOST=<Host of the SAP Gateway>
  GWSERV=<Gateway Service>
  ```

  For more details, refer to the topic Side Information on OS/2, Windows NT, UNIX and AS/400 Platforms: Sideinfo [Seite 114] (section “Side Info Tables”)

- The hosts and services involved must be configured in the TCP/IP network.

  For more details, refer to the following section Hosts and Services in the TCP/IP Network [Seite 209].

Process flow

A C program starts an ABAP program on another R/2 System and exchanges data with the ABAP program via CPI-C.

Communication Between R/2 (BS2000) and an External Program

Purpose

The following topics provide an overview about the configuration steps you must perform in the R/2 System and on the partner computer.

The configuration steps you must perform depend on whether the R/2 is the calling or the called system.

From R/2 to an External Program [Seite 37]

From an External Program to R/2 [Seite 38]

As of R/2 Release 5.0D, you can also use an RFC call instead of a CPI-C call.

From R/2 to an External Program

Purpose

You can start an ABAP program in an R/3 System or a C program on a UNIX computer from an R/2 System on the BS2000 host. This is made possible by the SAP communication program *gwhost*.

Prerequisites

The configuration requirements for this constellation are:

- The SAP Gateway on the UNIX platform must be configured.

  For more details, refer to the section SAP Gateway under OS/2, UNIX and WindowsNT [Seite 41].

- The R/2 table XCOM and the side info file SAPGW.DATA.SIDEINFO must be configured.

  The job SAPGWHO identifies the logical target description DEST of the side info file SAPGW.DATA.SIDEINFO via the TP parameter of table XCOM.

  For more details, refer to the following topics:

  – Side Information in R/2 on BS2000 Host: XCOM [Seite 112] (section “Side Info Tables”) under “Parameters for GWHOST Connections”

  – Maintaining the Side Info File in BS2000 [Seite 204] under “Connection Setup by the R/2 System” (Section “BS2000 Host Systems”)

- The hosts and services involved must be configured in the TCP/IP network.

  For more details, refer to the following section Configuration for a TCP/IP Connection [Seite 199] (section “BS2000 Host Systems”).

Process flow

The process is as follows:

1. The R/2 ABAP program starts the job SAPGWHO (communication program *gwhost*). The job SAPGWHO identifies the appropriate entry in the side info file SAPGW.DATA.SIDEINFO via the R/2 table XCOM.
2. The job SAPGWHO sets up the connection to an SAP Gateway on a UNIX computer (not under BS2000). In the course of this, the SAP Gateway is identified via the side info file.
3. The SAP Gateway starts the actual target program.

From an External Program to R/2

Purpose/Procedure

A C program starts an ABAP program on another R/2 System and exchanges data with the ABAP program via CPI-C.

Prerequisites

The configuration requirements for this constellation are:

- There must be an active SAP Gateway.

  For more details, refer to the following section SAP Gateway [Seite 40].

- The connection parameters must be configured.

  The side information file must contain target system and platform-dependent entries.

  The entries must have the following structure:

  ```
  DEST=<Symbolic Destination>
  PROTOCOL=C
  GWHOST=<Host of the SAP Gateway>
  GWSERV=<Gateway Service>
  ```

  For more details, refer to the topic Side Information on OS/2, Windows NT, UNIX and AS/400 Platforms: Sideinfo [Seite 114] (section “Side Info Tables”)

- The hosts and services involved must be configured in the TCP/IP network.

  For more details, refer to the following section Hosts and Services in the TCP/IP Network [Seite 209].

Communication Between C Programs

Purpose/Procedure

A C program starts a C program on another computer and exchanges data with this program via CPI-C.

RFC is not supported for this constellation.

Prerequisites

The configuration requirements for this constellation are:

- The SAP Gateway must be configured.

  For more details, refer to the following section SAP Gateway [Seite 40].

- If you have not created a local side information file, you must make the following entries in the side information file on the gateway computer:

  ```
  DEST=<Symbolic Destination>
  LU=<Target computer>
  TP=<Target program>
  ```

  For more details, refer to the topic Side Information on OS/2, Windows NT, UNIX and AS/400 Platforms: Sideinfo [Seite 114] (section “Side Info Tables”)

- The hosts and services involved must be configured in the TCP/IP network.

For more details, refer to the following section Hosts and Services in the TCP/IP Network [Seite 209].

SAP Gateway

Purpose

The SAP Gateway carries out CPI-C services within the R/3 world.

The SAP Gateway consists of several processes. In R/3, an SAP Gateway is started for each application server [Extern].

For certain constellations, an SAP Gateway comes into use as a separately installed R/3 instance or outside an R/3 System:

- Communication with an R/2 System (CUA interface to R/2)
- Starting external partner programs on remote systems which do not know a remote shell (WindowsNT)
- Application-specific disentanglement of communication (in certain cases)

Installation:

You should install the SAP Gateway components in the same way as you install all other SAP programs, i.e. in the executable files directory of the corresponding system tree.

CPI-C services can be subdivided according to their implementation:

- CPI-C services which set up connections to an MVS/VSE mainframe via LU6.2 [Extern].
- CPI-C services which set up connections within a BS2000 mainframe via DCAM.
- CPI-C services based on TCP/IP [Extern]. These allow for connections to be set up with R/3 Systems and external programs.

CPI-C services can be used either in the ABAP program or for the external programs via the interfaces.

Details about the SAP Gateway are discussed in the following topics:

SAP Gateway Under BS2000 [Seite 46]

SAP Gateway Under OS/2, UNIX, AS/400, and WindowsNT [Seite 41]

Authorizations for External Programs (Security) [Seite 54]

The SAP Gateway and The SNC Interface [Seite 53]

Error Analysis [Seite 90]

Using the SAP Gateway Monitor in R/3 [Seite 57]

Using the SAP Gateway Monitor Outside the R/3 System [Seite 74]

SAP Gateway Under OS/2, UNIX, AS/400, and WindowsNT

This section contains the following topics:

Gateway Processes

The SAP Gateway is made up of various processes:

- Gateway Read Process
- Gateway work process (for SNA/DCAM only)
- Gateway Monitor

These processes are described in the following topics.

Gateway Read Process

Gateway read *(gwrd, gwrd.exe)* is the main process in the gateway system.

It is started by the application server and checked by it periodically.

It starts the work processes, and checks them periodically. The gateway reader receives all `CPI-C` requests. When connections are made via LU6.2, the CPI-C requests are passed on to the corresponding work processes. For connections via `TCP/IP`, the gateway reader deals directly with the request.

Gateway work process

The gateway work process *(gwwp, gwwp.exe)* is needed to set up a connection via LU6.2 or DCAM.

In this case the process is either started dynamically by the gateway reader, or the request is passed to an active gateway work process. A gateway work process can serve many connections.

Gateway Monitor

The gateway monitor *(gwmon, gwmon.exe)* is used to analyze and administer the SAP Gateway.

You can start the monitor as required. When you start it, you initially get a list of active CPI-C connections. You can call up all the other monitor functions via a menu.

For details of the gateway monitor, refer to Using the SAP Gateway Monitor in R/3 [Seite 57] and Using the SAP Gateway Monitor Outside the R/3 System [Seite 74].

Starting and Stopping the SAP Gateway

Under UNIX and WindowsNT you start and stop the SAP Gateway together with the R/3 System.

For further details, see* R/3 System Administration *in the following documentation:
BC - Computing Center Management System [Extern]

To find out how to start and stop the SAP Gateway processes of the R/2 Workstation Software on the various platforms, look in the relevant document.

Separate Gateway on UNIX

To start a SAP Gateway installed separately on a UNIX machine, you specify a start profile:

```
gwrd -force pf=<profile> &
```

To cancel, you must send the INT signal to the gateway read process.

Use the following command to obtain the process ID of the gateway read process:

```
ps -ef | grep gwrd
```

To kill the process, send the relevant INT signal to the process:

```
kill INT <pid>
```

Separate Gateway on WindowsNT

To start a SAP Gateway installed separately on a WindowsNT machine, use the SAP Service Manager. For further details, see *R/3 System Administration* in the documentation BC - Computing Center Management System [Extern].

Configuring the SAP Gateway

Purpose

As with all SAP programs, the SAP Gateway can be influenced by parameters. For example, you can use parameters to set the maximum number of CPI-C connections or gateway work processes.

The installation of a SAP Gateway for TCP/IP connections within an Instance [Extern] of an R/3 System is standard. Using service G (see SAP Server [Extern]), you can install a gateway which supports SNA or DCAM.

The SAP Gateway reads the parameters from the SAP profile file like another server (*profile* directory in the R/3 Directory Tree [Seite 208]).

Process flow

You can specify four different types of parameter value. Evaluation corresponds to the following **hierarchy of priorities**:

- Priority 1: Command line arguments.

  These are only available for certain parameters, for example instance number.

- Priority 2: Instance profile.

  Each instance has a specific profile. The instance profile is used to set the parameter values of an instance process.

  The file name of an instance profile follows the convention <SAP System><instance>, for example CUAG45.

- Priority 3: Default profile in the R/3 System.

  The values in the default profile DEFAULT.PFL apply to the entire SAP system. All the instances in an SAP system access the default profile. However, if the parameter has already been set in the command line or in an instance profile, a parameter setting in the default profile will not take effect.

- Priority 4: Default values

  There are pre-set values (defaults) for most parameters. Unless you specify a preferred value, each of these parameters accepts the default system value. Default values can only be pre-set by SAP.

Changes to parameter values only take effect when you restart the processes concerned.

Profile Parameters

The profile parameters detailed below are standard for the SAP Gateway on `OS/2, UNIX` and WindowsNT platforms. Default values are assigned to these parameters.

In an R/3 System you can display all parameters with values by executing the program RSPFPAR or by starting the Gateway Monitor via *Tools* → *Administration, Monitor* → *System monitoring* → *Gateway Monitor* (Transaction SMGW), *GoTo* → *Parameters*.

You can maintain profile parameter values via *Configuration* → *Profile Maintenance* (Transaction RZ10) in the Computing Center Management System (CCMS).

To display parameter properties and descriptions, use Transaction RZ11.

You can change the pre-set parameter values (default values) by editing the profile parameter files.

SAP Gateway Under BS2000

The following topics are available:

Gateway Processes Under BS2000

Definition

In the following topic, the term *Process* is used as a synonym for *BS2000 Task*.

The Gateway consists of four different processes:

- Gateway Read Process
- Gateway work process
- Gateway Log Writer
- Gateway Monitor

The Gateway processes in BS2000 are used exclusively for switching connections to R/2 Systems.

You cannot, for example, start programs outside the R/2 System in the BS2000 host via the SAP Gateway.

Structure

Each process is described below:

Gateway Log Writer

The gateway log writer writes system log and error messages to the file SAPGW.SYSLOG. It starts and stops the gateway read process.

Gateway Read Process

Gateway read is the main process in the gateway system (Job *SAPGWRD*).

It starts the gateway writer and work process, and checks them periodically. The gateway reader receives all `CPI-C` requests. For connections to `BS2000-UTM` or `DCAM` applications, the `CPI-C` requests are passed on to the gateway work process. For connections via `TCP/IP`, the gateway reader deals directly with the request.

The gateway read process sends the results of the `CPI-C` requests back to the request initiator (return codes and possibly data).

Gateway work process

The gateway work process (job *SAPGWWP*) is needed if you want to set up a connection via `DCAM`.

The gateway work process is started by the gateway reader when the Gateway is started, and is closed when the Gateway is stopped.

Gateway Monitor

The gateway monitor (`P.`*GWMON* procedure in `SAPGW.LIB`) is used to analyze and administer the SAP Gateway.

Gateway Processes Under BS2000

It can be started online when needed. When the gateway monitor is started, you initially get a list of active `CPI-C` connections. You can call up all the other monitor functions via a menu.

You can delete connections, monitor the work process or display attributes.

The following attributes can be displayed:

- For each connection:

  Number, client host, client service, user, status, symbolic destination, conversation ID, protocol, work process assigned, time of the last action, etc.

- For each gateway work process:

  Number, number of CPI-C connections assigned, status, process ID (PID), Protocol type (C, I or E), etc.

For more details, refer to the section Using the SAP Gateway Monitor Outside the R/3 System [Seite 74].

Starting and Stopping the SAP Gateway Under BS2000

Under BS2000, you start and stop the SAP Gateway with the following Enter commands:

- To start: `/E SAPGW.LIB(E.SAPSTART),J-C=<Job class>`
- To stop: `/E SAPGW.LIB(E.SAPSTOP),J-C=<Job class>`

Configuring the SAP Gateway Under BS2000

Purpose

You can install the SAP Gateway under any user ID. It reads its parameters from the SAP profile file `SAPGW.RSPARAM`.

Read `SAPGW. README`

Always read the file `SAPGW. README`. It normally contains important current information.

Process flow

Parameter values take effect when an SAP process is started.

These parameter values may originate from various sources:

- Profile file

  Here, values are determined which differ from default ones.

- Default values

  There are definite encoded default values for most parameters. These values take effect unless you define other values.

Command line arguments are not supported in `BS2000`.

Changes to parameter values only take effect when you restart the processes concerned. Changes to default values can only be made by SAP.

Profile Parameters in BS2000

The profile parameters are set in the file SAPGW.RSPARAM. Please note that a series of parameters in the BS2000 environment can only have one pre-set value. You cannot change these parameters (or parameters of this kind which have not been listed here).

The following list is sub-divided as follows:

- General Profile Parameters
- BS2000-specific Profile Parameters

General Profile Parameters

Default values are set for most BS2000-specific profile parameters. You can change these values.

- SAP SYSTEM

  Two-digit SAP System number <`nn`>

  The SAP System number implicitly determines the TCP/IP service, for which the Gateway expects logon requests. The Gateway service contains the SAP System number: sapgw<nn>

- gw/req_stack_size

Number of CPI-C requests which can be stored for a CPI-C connection.

Default value: 30

- gw/max_conn

  Maximum number of currently active connections.

  Default value: 100

- gw/max_wp

  Maximum number of gateway work processes you can start.

  You can start up to ten work processes in **BS2000.** Depending on the load, a work process is sufficient for 50 to 100 connections.

- gw/max_conn_per_wp

  Maximum number of connections a gateway work process can accept.

- rdisp/TRACE

  Trace level (see side info parameter *CPI_TRACE*)

  rdisp/TRACE = 0 No tracerdisp/TRACE = 1 Error tracerdisp/TRACE = 2 Complete process, short data tracerdisp/TRACE = 3 Complete process, complete data trace

  The trace files are written in the respective SYSOUT protocol.

  Default value: 1

BS2000-specific Profile Parameters

Default values are set for most BS2000-specific profile parameters. You can change these values.

- bs2/appl_prefix

  Prefix for the DCAM applications open per session (two-digit)

- bs2/max_conn

  Maximum number of DCAM connections per work process

  This value should be identical to **gw/max_conn_per_wp**.

- bs2/n_buffer

  Number of buffers of the DCAM interface

  This value should be at least twice as high as **bs2/max_conn**.

- bs2/use_sideinfo

  Switch for side info table.

  bs2/use_sideinfo = 0 Do not use side info file.

  bs2/use_sideinfo = 1 Establish target system with destination and side info file.

  Default value: 0

- bs2/trace_to_stderr

Trace switch.

bs2/trace_to_stderr = 0 Traces not written to `SYSOUT`.

bs2/trace_to_stderr = 1 Traces written directly to `SYSOUT`.

Default value: 0

- bs2/enter_rd

  Enter command for starting the gateway reader.

  Default value: /E SAPGW.LIB(E.START.READER)

- bs2/enter_wp

  Enter command for starting the gateway worker.

  Default value: /E SAPGW.LIB(E.START.WORKER)

  The file `SAPGW.RSPARAM` contains a configuration model for 100 users. Seek advice from an SAP consultant before making any changes.

Checking TCP/IP Services

The `TCP/IP` port accessed by the gateway read process is in the Sysout file of the gateway read process `LOG.SAPGWRD.<tsn><date>.<time>`.

The services file SAPGW.SERVICES is not delivered. You cannot change this file.

You can display occupied `TCP/IP` ports with the operator command `/BCSHOW`.

The host names from the `BS2000` viewpoint are determined during `BCAM` generation `(SOKHOST)`.

The following commands let you check whether the respective host partner can be reached via `TCP/IP`:

- **`ping`** (under UNIX and WindowsNT)
- `/EXEC $TSOS.SYSPRG.BCAM.XXX.PING` (in BS2000, XXX=DCAM Version 110/120)

The SAP Gateway and The SNC Interface

Definition

As of Release 3.1G, communication is secured by the integration of the SAP **SNC** interface (**S**ecure **N**etwork **C**ommunication).

SNC supports third-party security systems (such as Kerberos, SECUDE, etc.). This provides for a reliable authentication of the partners and secure data transfer.

The SAP Gateway can reject connections that are not based on SNC.

You can set a number of SNC parameters (see the parameter documentation using Transaction RZ11, snc*).

For the SNC function calls of the CPI-C library, see the documentation SAP Communication: . Programming [Extern]

If a user wants to communicate using the SNC interface, the following prerequisites must be met:

1. The user has logged on to the security system
2. An SNC name and the SNC library have been defined using Side Info Parameter [Seite 114] or Environment Variables [Seite 107].
3. The SAP Gateway supports SNC and has been started using the system profile parameter *snc/enable*.

Authorizations for External Programs (Security)

Methods of realizing security regarding external programs are described below

- You can prevent people without the appropriate authorizations from starting external programs. Authorizations for Starting External Programs [Seite 55]
- You can prevent external programs from being illegally registered with the SAP Gateway. Authorizations for Registering External Programs with the SAP-Gateway [Seite 56]

Authorizations for Starting External Programs

Maintain the *secinfo* file in the *data* directory of the gateway instance. The syntax of the entries is as follows:

```
USER=<user>, [PWD=<pwd>,] [USER-HOST=<user_host>,] HOST=<host>,TP=<tp>;
```

Use a line of this format to allow the user **<user>** to start the **<tp>** program on the host **<host>**.

The level of authorization checking performed can be increased by specifying **PWD** and/or **USER-HOST**.

```
USER=mueller,    HOST=hw1414,      TP=test;
```

The user **mueller** can execute the **test** program on the host **hw1414**.

```
USER=hugo, PWD=pass, USER-HOST=hw1234,  HOST=hw1414, TP=prog;
```

The user **hugo** can execute the **prog** program on the host **hw1414**, as long as he has logged on to the Gateway from host **hw1234** and has used the CPI-C call CMSCSP to set the security password to *pass*.

If the user has used the CMSCSU call to set the security user, then this is also used for checking.

The '*' character can be used as a generic specification for any of the parameters.

If either of **PWD** or **USER-HOST** are not specified, the value '*' is assumed.

Example: All users should be allowed to execute the **test** program on the host **hw1414**:
USER=*,HOST=hw1414,TP=test;

You can display the current list of security entries using the SAP Gateway Monitor and you can update this display at any time.

Authorizations for Registering External Programs with the SAP-Gateway

You can prevent external programs from being illegally registered with the SAP Gateway.

To do so, you must maintain the *secinfo* file in the DATA directory of the gateway instance.

The syntax of the entries is as follows:

```
USER=*, HOST=<host>,TP=<tp>;
```

Transaction program `<tp>` is allowed to register from `<host>`. Although the user entry is not used, you must specify it.

```
USER=*, HOST=*, TP=Hugo
```

```
USER=*, HOST=hw1414, TP=Hugo2
```

Program Hugo is allowed to register from any host.
Program Hugo2 is only allowed to register from host hw1414.
`HOST` specifies from which host the program is allowed to register.
If you specify `HOST=*`, the program may connect from any host.

If the external program is to allowed to register from a number of hosts, you must create an entry for each host in the *secinfo* file.

You can view the current list of security entries using the gateway monitor.

Using the SAP Gateway Monitor in R/3

Use

The Gateway Monitor is used for analysis and administration of the SAP Gateway in the R/3 system.

The initial screen of the Gateway Monitor shows all of the active connections.

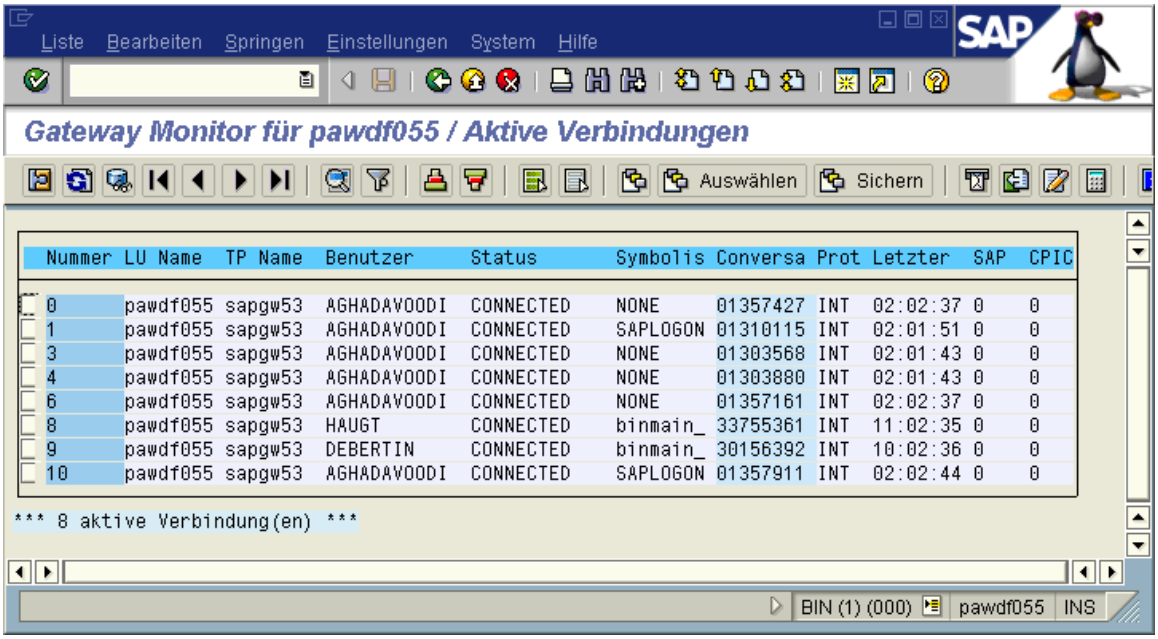

The fields displayed here have the following meaning:

Number	Connection number
`LU Name`	The term "logical unit" is a term borrowed from the SNA world and describes a logical node in an SNA network. The remote partner program is intended to run on this node. With CPIC connections via TCP/IP, this field describes the host on which the partner program is running or supposed to run.
`TP Name`	Long transaction program name
`User`	Name of the user who is currently using the connection

Status	This field indicates the status of the connection. FREE : Connection is not being used INIT : Connection is being initialized INITIALIZED : Connection initialized CONNECT : Setting up connection CONNECTED : Connection has been set up DISCONNECT : Connection to be closed down DISCONNECTED : Connection closed down
Symbolic destination	The symbolic destination is required when CPIC connections are set up and is a key for the TXCOM and side information tables. These tables manage the required connection parameters.
Conversa(tion Id)	The conversation Id is a unique number that can be used to identify the connection. By clicking this field, you can display details on the conversation.
Prot	This field indicates the protocol agreed with the client. R2PR: R/2 presentation INT : Internal communication EXT : External communication REG : External communication with registered program CPIC: CPI-C communication NE : External communication, not started by gateway
Last	Time of last activity
SAP	SAP return code: These return values are defined by SAP. The previous and following syslog messages provide further details on the source of the error. If the syslog messages are not sufficient, the relevant trace files must be analyzed. The return codes are described under Error Analysis [Seite 90].
CPIC:	CPI-C return code: The return values of the individual CPI-C functions and their meaning are defined in the "X/Open Developers' Specification - CPI-C". The previous and following syslog messages provide further details on the source of the error. If the syslog messages are not sufficient, the relevant trace files must be analyzed.

Features

You can perform the following functions in the SAP Gateway Monitor:

Local Gateway or SNA Gateway [Seite 60]

Displaying the Logged On Systems [Seite 61]

Displaying Existing CPI-C Connections [Seite 62]

Activities

You can launch the Gateway Monitor with transaction SMGW or by choosing the following menu path: *Tools* → *Administration, Monitor* → *System Monitoring* → *Gateway Monitor*

Local Gateway or SNA Gateway

You can use *Goto* → *Gateway* to choose the type of gateway to which the display options should apply.

You can switch between the local SAP Gateway and the SNA Gateway to the R/2 mainframes.

Displaying Clients Currently Logged On

You can display a list of currently logged on systems via *Goto* → *Logged on systems* .

The following values are displayed for each system that is logged on:

- LU name of the system
- TP name of the system
- System type

  (`NORMAL_CLIENT` : Normal client (external program)

  `LOCAL_R3`: local R/3 System

  `REMOTE_GATEWAY`: connection to remote gateway

  `FROM_REMOTE_GATEWAY`: connection from a remote gateway

  `REGISTER_TP`: Registered transaction program
- Host name
- Host address:

  All TCP/IP names on the host. If there are several network cards then there may be several entries here. Usually 5 alternative host names are supported.
- Request time

By choosing *Goto* → *Logged on systems* again, you can either delete a client or display detailed information.

Displaying Details on CPI-C Connections

By choosing *Goto* → *Active connections* → *Details*, you can display details on the active CPI-C connections on which the cursor is positioned in the initial screen. This is important for specialists, particularly for troubleshooting purposes.

You can also choose *Goto* → *Active connections* to

- Interrupt or delete the connection (see Deleting a CPI-C Connection [Seite 63])
- Reset the error counter for this connection or all error counters (see Resetting Error Counters [Seite 64])
- Activate or deactivate the trace function for these connections.

Deleting a CPI-C Connection

There are two ways of clearing down a connection.

By choosing *Goto* → *Active connections* → *Interrupt connection*, you can clear down the connection; a corresponding return value, however, remains in the connection table so that the CPI-C programs affected can be informed.

When you choose *Goto* → *Active connections* → *Delete connection*, the connection is cleared down and the corresponding entry is deleted from the connection table.

To use this function the system authorization profile S_ADMI_FCD is needed (*Tools* → *Administration, Maintain users* → *Profiles*).

Resetting the Error Count

If an attempt to establish an SNA connection fails, then it is marked with an error count. This means that the next ten connections to the same partner will not be made using the troublesome SNA-LU.

Choose *Goto* → *Active connections* → *Delete error count* or *Goto* → *Active connections* → *Delete all err. cnts*

to reset the error count for one or all SNA connections:

To use these functions the system authorization profile S_ADMI_FCD is needed (*Tools* → *Administration, Maintain users* → *Profiles*).

Displaying Gateway Work Processes

You can display a list of work processes via *Goto* → *Work processes*. The following values are displayed for each gateway work process started:

- Number in the process table
- Number of CPI-C connections assigned to this process
- Number of times this process has been started so far
- Status of the process:

  `READY`: Process awaits request

  `BUSY`: Process working on a request
- Number of the CPI-C connection currently served

  (Number in connection table)
- Number of the request block which holds the CPI-C function you have just executed

If no work process has been started when this function is called, the following message is displayed: *No work processes*

Displaying Parameters and Attributes of the SAP Gateway

By choosing *Goto* → *Parameter* → *Display*, you can display a list of the parameters and attributes of the SAP Gateway.

You will see a list of the parameters with their current values, of the attributes (release information, gateway host and service etc.) and of shared memory sizes.

Changing Gateway Parameters

Use

Some of the gateway parameters can be changed dynamically. The system does not have to be restarted.

Procedure

Choose *Goto* → *Parameters* → *Change*, the parameters that can be changed dynamically are then displayed. You can enter the new values here.

A detailed description of the parameters is provided by the parameter documentation in transaction RZ11.

Displaying Memory Allocation

You can display the memory allocation via *Goto* → *Memory allocation*.

The current memory allocation will be shown, i.e. all locked request blocks. The number of each request block and the process which is currently using it are displayed.

Display Gateway Statistics

The Gateway statistics allow you to check the performance of the SAP Gateway. You can activate and deactivate these statistics dynamically. Resetting the statistics causes all the data currently gathered to be deleted and the statistics to be deactivated.

To call up the statistics functions, choose Goto → Statistics. You can display, activate, deactivate, or reset the statistics.

The statistics display includes the following:

- Timeout count
- Request block overflow count
- Request count (read and work processes)
- Total request time (read and work processes)
- Time for each request (minimum, mean, maximum for read and work processes)
- Longest request (read process)
- TCP statistics
- CPI-C statistics

Activating Traces

You can activate the trace function for the gateway and for external programs.

Gateway

You have the following options via the menu option *Goto* → *Trace* → *Gateway*:

- Display file / Reset file

  You can display and reset the trace file of the Gateway Reader, or, if you requested the display of work processes, the trace file of the work processes.

- Increase trace level / Decrease trace level

  You can increase or reduce the trace level. (For information on trace levels, see the description of parameter rdisp/TRACE [Seite 90])

External Programs

You can activate and deactivate tracing for communication with external programs by choosing *Goto* → *Trace* → *External programs* → *Activate* or *Deactivate.*

Displaying External Security Information

The following options are available via *Goto* → *Ext. security*:

- Displaying security
- Reading security again

This allows the security information to be modified during the runtime of the gateway.

You can find further information under Authorizations for External Programs (Security) [Seite 54]

Displaying the Side Info File

You can display the side info file used by the gateway by choosing *Goto* → *Read side info file*.

This file is set with the profile parameter **`gw/sideinfo`** (default `/usr/sap/<SID>/<INSTANCE>/data/sideinfo`). The contents of the file are simply displayed as a list.

More detailed information on side info is provided under Side Information Tables [Seite 91].

Displaying Gateway Release Information

You can display the release information for the gateway by choosing *Goto* → *Release information*.

Using the SAP Gateway Monitor Outside the R/3 System

Use

The gateway monitor is used to analyze and administer the SAP Gateway.

The profile you assign to it must be the same as for the Gateway.

This process has different names:

UNIX: **gwmon**

WindowsNT: **gwmon.exe**

BS2000: **P.GWMON**

Integration

The trace file of the gateway monitor is called: dev_gwmon

The functionality is the same as that of the SAP Gateway Monitor in R/3, the only difference being the menu and submenus.

The detailed information displayed by double-clicking a connection in R/3 is available here under the expert functions [Seite 87].

Features

When you launch the Gateway Monitor without arguments, all of the permitted arguments and options are displayed:

Output	Meaning	
pf=<profile>:	Specify Name of parameter file or	Specify the profile file or
nr=<nr>:	System number	Specify the number of the system
[-e all]:	Reset error counts of all connections	Reset error counts for all connections
[-e <conn no>:	Reset error count of specified connection	Reset error count for the connection with the number <conn no>
[-V]:	Print release	Output release
[-refresh n]:	Refresh after n seconds	Refresh after n seconds
[-gwhost host]:	Hostname of remote gateway	Host name of the remote gateway
[-gwserv service]:	Service of remote gateway	Service name of the remote gateway

The individual functions are grouped into separate submenus.

Main Menu

When you enter **gwmon -gwhost <host> -gwserv <service>**, the list of activate connections on the gateway is first displayed. This is followed by

```
q - quit
m - menu
```

You generally quite the Gateway Monitor with **q** and use **m** to go to the (next higher) menu.

By choosing **m** and Return, you go to the main menu:

Screen output	Meaning
1 : display connection table	Display Active CPI-C Connections [Seite 77]
2 : display work process table	Display Gateway Work Processes [Seite 79]
3 : display system information	Display the Logged On Systems [Seite 80]
4 : connection attributes	Connection Attributes [Seite 81]
5 : statistics	Gateway Statistics [Seite 82]
6 : gateway parameters and attributes	Display Gateway Parameters and Attributes [Seite 83]
7 : security information	Display Security Information [Seite 86]
8 : expert functions	Expert Functions [Seite 87]
+ : increase gateway trace	Increase gateway trace level
- : decrease gateway trace	Decrease gateway trace level
q - quit	Exit Gateway Monitor

Inputs **4**,**5**,**7** and **8** lead to submenus that provide functions for the relevant areas.

Activities

First find out on which host your SAP Gateway Monitor is installed:

- Operating system command:

  msclients name=<SAP-System>

- In R/3:

  Tools → *Administration* → *Monitoring* → *System monitoring* → *Servers*

To start the gateway monitor, call the corresponding executable file, specifying a profile file:

Under UNIX: **gwmon pf=<profile>**
Under WindowsNT: **gwmon.exe pf=<profile>**
In BS2000: **/CALL SAPGW.LIB(P.GWMON)**

All of the lists are updated after 5 seconds. You can refresh them sooner by pressing Enter.

Using the SAP Gateway Monitor Outside the R/3 System

It is standard to use 50 lines per screen. The number of lines can be changed (for example, under UNIX you can set the shell variable LINES).

Displaying Active CPI-C Connections

The header specifies the size of the connections table and the current number of entries.

The following attributes are displayed for each active connection:

- Number in connection table
- The client who has set up the connection. The host and service / program names are displayed
- The SAP user who has set up the connection. For the CUA Interface, the SAP user is not displayed at the moment.
- Connection status:

INIT	Connection is being initialized; CMINIT not yet carried out.
INITIALIZED:	Connection initialized
CONNECT:	Connection is being made; CMALLC not yet carried out.
CONNECTED:	Connection set up
DISCONNECT:	Connection to be closed down
DISCONNECTED:	Connection closed down
FREE	No active connection (should not be displayed)

- Symbolic destination
- Conversation ID
- Protocol:

R2PR	R/2 presentation
INT	Internal communication with an R/3 System
EXT	External communication with a program written in C
CPIC	Communication via SNA

- Type of transmission line: F: fast line S: slow line
- Number of the gateway work process assigned(only for CPIC protocol type)
- Number of the request block which holds the CPI-C function you have just executed
- Resource number (IBM and DEC only) for access to the side info table
- Error ID
  The resource assigned is only re-used when the error ID has the value 0.
  If there is an error at the resource assigned, the error ID is set to the value 10.
  When connections are subsequently made to the same partner, the error ID is lowered by 1.
- Time of the last action on the CPI-C connection

Displaying Gateway Work Processes

The header specifies the size of the process table. The following values are displayed for each gateway work process started:

- Number in the process table
- Number of CPI-C connections assigned to this process
- Number of starts
- Status of the process:

  READY: Process awaits request

  BUSY: Process working on a reqest
- Number of the process

  Number of the CPI-C connection currently being served
- (Number in the connection table)
- Number of the request block which holds the CPI-C function you have just executed

Displaying Logged on Systems

The following values are displayed for each system that is logged on:

- LU name of the system
- TP name of the system
- ConvId of the system

  All TCP/IP names of the host. If several network boards are in use, several entries can be made. Generally, five alternative host names are supported.
- ADDR: IP address(es) of the host
- REQTIME: Time of the last system request

Connection Attributes

Use this submenu to display additional information about the CPI-C connections.

Features

The submenu appears as follows:

```
Connection attributes
---------------------------------------------
1 : display connection
2 : delete connection, keep return-code
3 : delete connection, free connection
4 : activate connection trace
5 : deactivate connection trace
q - quit
m - Menu
-->
```

Displaying the CPI-C connection

Other attributes are displayed, in addition to those in the basic list. These include:

- Partner LU
- Partner TP
- CPIC and SAP return codes
- Host address and complete host name
- Partner host address and complete partner host name
- The current CPI-C function (for TCP/IP connections only)

Deleting the CPI-C connection

You can delete connections manually. There are two types of deletion mode:

- The connection is deleted, however a return code is retained in the connection table that informs the affected CPI-C programs (keep return code).
- The connection is deleted and the corresponding entry in the connection table is also deleted (free connection).

If you choose these functions, you must enter the number of the connection in the connection table.

Activating and deactivating the trace

If you choose this function for a single connection, you must enter the connection's number. The output of the trace is in the file `dev_rd`.

Gateway Statistics

Use

The Gateway statistics allow you to check the performance of the SAP Gateway. You can activate and deactivate these statistics dynamically (see also parameter gw/stat). By resetting the statistics, you delete all the values which have accumulated and deactivate the statistics.

Features

The following submenu appears:

```
Statistics menu-----------------------------------------------
1 : activate statistics
2 : display statistics
3 : reset statistics
q - quit
m - Menu
-->
```

Enter 1 to activate or deactivate the statistics, 3 to reset the statistics and 2 to display the statistics:

General statistics, gateway read statistics and TCP statistics are displayed. The display includes the following:

- Timeout count
- Number of timeouts that occurred establishing the connection
- Request block overflow count
- Number of data packages stored temporarily in local memory
- Request count (read and work processes)
- Total request time (read and work processes)
- Time for each request (minimum, mean, maximum for read and work processes)
- Longest request (read process)
- TCP statistics
- CPI-C statistics

Displaying Gateway Parameters and Attributes

All gateway parameters and the size of all shared memory areas created by the gateway are displayed.

```
Gateway monitor, connected to hs0311 / sapgw53

Display parameter and attributes

-------------------------------------------------------------
---

Profile parameter              : Value

-------------------------------------------------------------
---

gw/max_sleep                   : 20

gw/non_conversational          : 1

gw/auto_disconnect             : 0

gw/req_stack_size              : 30

gw/max_conn                    : 500

gw/max_wp                      : 0

gw/max_conn_per_wp             : 10

gw/cpic_timeout                : 120

gw/reg_timeout                 : 60

gw/side_info                   :
/usr/sap/BIN/DVEBMG53/data/sideinfo

gw/sec_info                    :
/usr/sap/BIN/DVEBMG53/data/secinfo

gw/stat                        : 1

gw/cpic_security               : 1

gw/internal_timeout            : 0

gw/max_sys                     : 300

gw/max_shm_req                 : 50

gw/max_shm_req_per_conn        : 10

gw/max_overflow_size           : 1000000

gw/max_overflow_usage          : 10

gw/keep_process                : 1

gw/keepalive                   : 300

gw/rem_start                   : REMOTE_SHELL
```

Displaying Gateway Parameters and Attributes

```
gw/remsh                      : /usr/bin/remsh
gw/ims_signon                 : 1
gw/ims_signon_cmd             : ON %s %s
gw/ims_max_send_length        : 0
gw/receive_immediate          : 1
gw/gwwp_short_polling_time    : 100
gw/gwwp_long_polling_time     : 1000
gw/max_short_poll_no          : 20
gw/compatibility              : 1
gw/monitor                    : 2
gw/netstat                    : /usr/bin/netstat -in
gw/netstat_once               : 1
gw/close_routes               : 120
gw/timeout                    : 10000
gw/internal_timeout           : 0
exe/gwrd                      : /usr/sap/BIN/SYS/exe/run/gwrd
exe/gwwp                      : /usr/sap/BIN/SYS/exe/run/gwwp
rdisp/sna_gateway             : is0001
rdisp/sna_gw_service          : sapgw00
rdisp/max_gateways            : 100
rdisp/max_comm_entries        : 200
snc/enable                    : 0
snc/gssapi_lib                : /krb5/hpux/lib/libkrb5.sl
snc/permit_insecure_start     : 0

Attributes
Release                       : 30F
Release no                    : 3060
gateway hostname              : hs2001
gateway service               : sapgw13
req_sync_limit                : 24
appc_ca_blk_size              : 32348
gwreq_ln                      : 32536
appcdata_ln                   : 32268
overflow_size_limit           : 100000
```

```
trace level                    : 1
trace level external programs : 0
PID Gateway Reader             : 29038
internal version               : 2

Shared memory sizes
CONN_TBL entry                 : 616
CONN_TBL total                 : 369600
WP_TBL entry                   : 28
WP_TBL total                   : 0
GW_REQ_INDEX entry             : 10
GW_REQ_INDEX total             : 1010
GW_SHM_TBL entry               : 32536
GW_SHM_TBL total               : 3254416
STATISTIC area                 : 280
total shared memory size          : 3625306
```

Displaying Security Information

Use

Displaying security information

Use this function to display up-to-date security information.

Refreshing security information

Use this function to import security information from the security file. This allows the security information to be modified during the runtime of the gateway.

Expert Functions

Use

These functions are for those users with expert knowledge. The functions are described in the following:

Features

The following submenu appears:

```
Expert functions
-------------------------------------------------------------------
     1 : memory usage
     2 : request block
     3 : reset error counter
     4 : reset all error counter
     5 : reset NI buffer
     6 : dump NI buffer
     7 : reset trace file
     8 : activate   external program trace
     9 : deactivate external program trace
    10 : dump connection table
    11 : dump system table
    12 : dump work process table
    13 : dump remote gateway table
    14 : dump gateway's release infos
    15 : tail trace file
    16 : edit trace file
     q - quit
     m - Menu
   -->
```

Displaying memory usage

The header displays the maximum number of request blocks, the number of request blocks being currently used, and the maximum number of previously used request blocks. The current memory usage is displayed, that is all blocked memory blocks. The number of each request block is displayed, and the process that is currently working on it.

Displaying memory contents

You can display the contents of a request block. To do this, you have to enter its number.

Resetting the IBM error counter

If the gateway is running under IBM, then connections with an error are flagged with an error counter. They are only used again when the counter has been reset to 0. You can reset to 0 with **gwmon**, both in dialog, and in the background. In dialog, you have to select the function "reset error count" in the expert menu, you can then specify the number of the connection that you want to reset, or you can specify "all". To reset the error counter for one or all connections in the background, use the calls **gwmon -e <nr> pf=...** or **gwmon -e all pf=.. gwmon** then exits.

Resetting the NI Buffer

Use this function to reset the NI buffer (it buffers host name and IP addresses and service names. This means that all buffered entries will be deleted from the buffer.

Dumping the NI buffer

You can use this function to write the contents of the NI buffer to the trace file `dev_rd`.

Resetting the trace file

Use this function to reset the trace file. You need to do this is the file has become very large, for example, because of error analyses.

Activating and deactivating the trace for external programs

You can use this function to trace programs started by the gateway. This is necessary for error analysis. The file `CPICTRC<pid>` is generated in the working directory.

Dumping the connection table

This function is the same as the Display menu option.

Dumping the system table

This function displays all available information on a system that is logged on to the gateway.

Dumping the work process table

This function displays all available information on the gateway work processes.

Dumping the remote gateway table

This function displays all available information on a remote gateway logged on to this gateway.

Dumping the gateway's release information

This function displays the gateway's release information. The output is the same as the gateway's V option.

```
Gateway monitor, connected to hs0311 / sapgw53
Gateway's release info
-----------------------------------------------------
kernel information
------------------
kernel release = 46A
compiled on = HP-UX B.10.20 E 9000/889
compiled time = Jul 8 1998 22:04:32
patch level = 0
supported environment
---------------------
operating system
HP-UX B.10
Development system build information:
-------------------------------------
Host : hs0055
Srcdir: /bas/BIN/src
```

```
Gendir: /sapmnt/hs0055/b/bin/hp/O
Basdir: /bas/BIN/gen/opt/hp
IKVers: 19982700
```

Displaying the end of the trace file

You can use this function under UNIX only. It display the last two lines of a file.
You can control this function with the following environment variable:

- `XTERM_CMD : Command for generating a new window. default : "xterm -bg BLUE -T \"%s\" -e %s &"`
- `TAIL_CMD : Command for displaying the last two lines of a file default : "tail -f %s"`

Displaying the trace file in the editor

You can use this function under UNIX only. It displays a file in the editor.
You can control this function with the following environment variable:

- `XTERM_CMD : Command for generating a new window. default : "xterm -bg BLUE -T \"%s\" -e %s &"`
- `EDITOR_CMD: Command for starting an editor default : "vi %s"`

Error Analysis

You can use the following utilities for error analysis:

System logs

In accordance with the dialog system, the SAP Gateway records system logs for all error situations. You can evaluate the system logs with the usual tools.

Traces

In addition you can record detailed traces. To do this you have to set a trace level in the parameter `rdisp/TRACE`:

`rdisp/TRACE = 0` no trace
`rdisp/TRACE = 1` error trace
`rdisp/TRACE = 2` complete process trace, short data trace
`rdisp/TRACE = 3` complete process trace, short data trace

The traces are to be found in the following files:

Process	Trace file
Gateway read process:	dev_rd
Gateway work process:	dev_wp<No.> (for SNA/DCAM only)
Gateway monitor:	dev_gwmon

All trace lines describing an error begin with ***. All trace lines corresponding to a system log begin with ***LOG, followed by the system log number and the version of the variable parts of the system log.

In BS2000 the traces are written to SYSOUT, providing you have the following parameter setting:
`bs2/trace to stderr = 1`

Return Codes

For troubleshooting purposes, it is often helpful to understand the meaning of the return codes.

The CPI-C return codes and the return codes from the SAP Gateway are explained in the R/3 note 63347.

Side Information Tables

Definition

Side info tables contain information for communication between programs/systems in the form of a sequence of parameters:

- Symbolic name of the target system (DEST = Destination)

  Following the symbolic name are the connection parameters. The parameters are as follows.

- Name of the logical unit (LU) of the partner
- Name of the transaction program to be called (TP)
- Specific parameters according to constellation and system platform

Side info tables therefore play an important role in connection setup.

For more information refer to Side Info Parameters [Seite 93].

Use

When a program is to communicate with a partner program, the CPI-C interface requires a certain amount of information in order to initialize communication.

As the program should not contain any communication-specific parameters. It is stored as parameter values in one or more configuration files. Information of this type is stored as **Side Information** outside the application.

The system administrator maintains the parameter values for all `CPI-C` target system connections in side info tables.

Structure

Side information tables have different names depending on SAP System and platform:

In R/2:	XCOM	(For RFC: Also RFCD)
In R/3:	TXCOM	(For RFC: Maintain TRFCDE via SM59)
OS/2, UNIX, WindowsNT	sideinfo	
BS2000:	SAPGW.DATA.SIDEINFO (SAP Gateway under DCAM)	

Integration

Parameter values of the various side info tables take effect according to constellation. For more information on this refer to the section Side Info Table Hierarchy [Seite 109].

This section contains the following topics:

Side Information Tables

Side Information In R/3: TXCOM [Seite 115]

Side Information Parameters

Definition

Side info tables contain both general and specific parameters.

General Parameters

As a rule, side info tables contain the following general parameters:

- Symbolic destination (DEST)

  Side information for a specific partner program is indicated by a symbolic name for the target system. The symbolic name is followed by a series of connection parameters. These always include the following parameter values.

- Name of the logical unit (LU) of the partner

  This parameter specifies the name of the LU, where the partner program is located. The local LU must know this LU when setting up a connection.

- Name of the transaction program (TP)

  This parameter specifies the name of the remote program.

For more information refer to General Parameters [Seite 95].

Specific Parameters

Side info tables can contain parameters which are specific to a particular constellation and system platform. Some examples:

Protocol type

Protocol type (Parameter *PROTOCOL* in *sideinfo*, *Prot* in *TXCOM*) is an example of a parameter which is assigned a specific value according to constellation.

The following values are possible:

C:	The partner program is an ABAP program in R/2.
I:	The partner program is an ABAP program in R/3, which can be accessed via TCP/IP.
E:	The partner program is a program written in C, which can be accessed via TCP/IP and started by means of fork/exec, remote shell or rexec.
F:	The partner program is a C program, which can be accessed via TCP/IP and started externally (for example, by the R/3 Frontend or an R/3 Server).
R:	The partner program is a C program, which can be accessed via TCP/IP and has registered at the SAP-Gateway (via SAP_CMREGTP, see SAP Communication: Programming [Extern]
G	The partner program is a C program, which can be accessed via TCP/IP and started externally (for example, by the R/3 Frontend or an R/3 Server).

Side Information Parameters

MODE_NAME

The parameter `MODE_NAME` is an example of a SNA parameter. This parameter is required on a `HP-UX` or WindowsNT platform with an SNA host. `MODE_NAME` corresponds with the LOGMODE operands of the MODEENT macros in the logmode table in VTAM.

LOCAL_LU

This parameter is required on a WindowsNT platform with an SNA host. LOCAL_LU is the name of the APPC Local LU (Alias).

For more detailed information on parameters for different platforms and constellations refer to:

SNA Connection under OS/2 [Seite 97]

SNA Connection under UNIX [Seite 100]

SNA Subsystem Platforms on R/2 [Seite 105]

Integration

Default Values in the SAP Parameter Profile for BS2000, UNIX and WindowsNT

A group of parameters are predefined as profile parameters with default values (see Configuring the SAP Gateway [Seite 44] and Configuring the SAP Gateway under BS2000 [Seite 50]. If you do not want to work with these default values, you can assign alternative values to the corresponding parameters in the side info table.

General Parameters

Side information files can contain the following platform-independent parameters:

To reduce configuration work, you can define default entries under **DEST=COMMON_PART**. All entries that you define under this “destination” are default values for the remaining side info entries.

If an entry is missing for a destination, the default entry is assumed, provided a default entry has been defined under **DEST=COMMON_PART**.

The entry **DEST=COMMON_PART** must be the first entry in the side information file.

General parameters of the *sideinfo* table:

Parameter	Meaning
DEST	Symbolic name of the target system
LU	R/3 application host SNA: Logical unit (LU) of the partner
TP	Transaction program of the partner
PROTOCOL	Protocol type C, I or E (see specific Side Info Parameters [Seite 93])
GWHOST	Host, on which the SAP Gateway is running
GWSERV	Gateway service
MODE_NAME	SNA mode name
CPIC_TRACE	Trace switch: 0, 1, 2 or 3
CONV_TYPE	Switch: 1 = *Mapped* Conversation [Extern] 0 = *Basic Conversation*
KEEP_SESSION	Session is maintained (values 1 or 0 for IMS)

If you are using SAP’s SNC interface:

SNC*	Name of the SNC partner
SNC_MODE	SNC switch: ON (Default setting when using SNC) OFF (deactivates SNC, overrides SNC and SNC_LIB)
SNC_LIB *	Name of the SNC library

(* Optional parameters, see also Environment Variables [Seite 107])

Connection to an R/2 System

```
DEST=K50
LU=K50T00
TP=X1SA
```

General Parameters

```
PROTOCOL=C
GWHOST=is0001
GWSERV=sapgw00
CPIC_TRACE=2
```

Please note the following points:

- Depending on application, not all the entries have to be available:
  You do not have to define the GWHOST and GWSERV parameters in the following cases:
  - When the SAP Gateway is not needed (direct communication via SNA CPI-C).
  - When the SAP_CMINT [Extern] call makes the parameters available.
- You can access the side info file in the CPI-C program and possibly in the SAP Gateway. It can be a matter of various files, depending on the call directory and the environment variable `SIDE_INFO`.

SNA Connection under OS/2

On an OS/2 workstation with an SNA host, the side info table is located in the `\SAP_WS` path.

If you are storing it in another directory, you must use the `SIDE_INFO` environment variable.

Release 1.0xx of the OS/2 CUA Interface (R/2 Workstation Software):

The table is called SAPCPIC.TBL. It is localized with the environment variable SAPTBL.

You will find a description of the parameters under "Table SAPCPIC.TBL" below.

The side info table describes all the possible CPI-C connections to partner systems.

The entries are read and used for connection setup according to the parameter specified in the calling program from CMINIT (dest).

Table SIDEINFO

The structure and parameters of the table SIDEINFO are described at the beginning.

```
DEST=K50
LU=K50T00
TP=X1SA
PROTOCOL=C
GWHOST=is0001
GWSERV=sapgw00
MODE_NAME=LU62TST1
LOCAL_LU=LULOC01
CPIC_TRACE=2
TIMEOUT=10
```

Table SAPCPIC.TBL

In Release 1.x of the R/2 Workstation Software, the table is called SAPCPIC.TBL. It is localized with the environment variable SAPTBL.

```
*************************************************************
*
*DEST  LU_ALIAS  PLU_ALIAS  REMOTE_TP  LOCAL_TP  MODE
DATA
*************************************************************
*
E50    LTRCA63   E50TR1     X1SA       CICSE50   LU62TST1
EBCDIC
E50    LTRCA64   E50TR2     X1SA       CICSE50   LU62TST1
EBCDIC
K43    LTRCA65   K43TR      X1SA       CICSE50   LU62TST1
EBCDIC
```

SNA Connection under OS/2

```
K43    LTRCA66   K43TR1     X1SA       CICSE50   LU62TST1
EBCDIC
*************************************************************
***
```

The parameters have the following meaning:

DEST

Symbolic destination (max. 8 characters)

LU_ALIAS

Name of the local *LU_ALIAS* to be used for a particular connection (max. 8 characters)

PLU_ALIAS

Name of the *Partner LU ALIAS* to be used for a particular connection (max. 8 characters)

REMOTE_TP

Name of the program to be initiated on the remote host (max. 8 characters)

If the partner program is on an OS/2 system, the entry in this table must match the name of the partner program.

LOCAL_TP

Name of the local program which accesses the SAP CPI-C interface.

MODE

Name of the SNA session to be used for a particular connection.

DATA

Character set, in which data is transferred.
This information is only used for trace and error log evaluations.
Legal values: EBCDIC or ASCII

Comments:

1. *LU_ALIAS, PLU_ALIAS, REMOTE_TP* and *MODE* must be configured with the *IBM Communications Manager* (See OS/2: Communications Manager [Seite 157]).
2. You can make several entries in the table for a particular symbolic destination. Entries with a common symbolic target address correspond to alternative SNA connections to a particular partner.

   If a particular connection is in use (for example because all the permissible *Sessions* between local *Logical Unit* (LU) and *Partner Logical Unit* (PLU) are in use), an alternative connection is sought in the table SAPCPIC.TBL.

   If all possible SNA sessions are in use, the *Call* CMALLC returns the error PRODUCT_SPECIFIC_ERROR. You will also find the following error message in the accompanying error log: SAP_NO_FREE_SESSION_AVAILABLE.

Environment Variables Under OS/2

You can use the following environment variables:

- SIDE_INFO (SAPTBL)

Environment variable with the fully qualified name of the side info table.(e.g. `E:\SAP_WS\SIDEINFO`)

In Release 1.0xx of the CUA Interface the environment variable is SAPTBL.

If this variable is not defined, the table must be located in the `\CMLIB` directory of the *IBM Communications Manager*.

- CPIC_TRACE (CPIC_TRC)

  Variable with trace switch
  In Release 1.0xx of the CUA Interface the environment variable is `CPIC_TRC`.

  Legal values are 1, 2 or 3:
  1: Error trace
  2: Complete process trace, short data trace
  3: Complete process trace, complete data trace. When the trace function is switched on, a log file named `CPxxxxx.TRC` is created in the current directory `(xxxxx=process number)`. You can use this log file for error analysis.

- COMTBLG:

  Only for DCA software:
  Variable for conversion table
  This variable gives the fully qualified name of the table, which is used by the DCA software for character conversion according to *SNA Character Set G*.
  Example: D:\DCA\SAMPLES\CSVTBLG.DAT

- CONVERT

  Variable for conversion table.
  If you do not want to use standard tables, this variable lets you define your own conversion table for ASCII-EBCDIC conversion.

  The CMCNVI and CMCNVO functions work with pre-defined standard tables.

- SAP_KEEP_SESSION

  This variable defines whether, after closing a LU6.2 connection, the session is retained or closed as well (side info parameter KEEP_SESSION).
  For an R/2 host with an IMS system, the existing session cannot be closed.

  Legal values:
  0: Session is closed down
  1: Session is retained in spite of instruction to the contrary

SNA Connection under UNIX

The parameters for the R/2 host connection are placed in the *sideinfo* side info table.

For SNA connections the SAP Gateway always reads the local side info file. If details are available in the XCOM table on the host, they are ignored.

C is the only possible protocol type:
The partner program is an R/2 System and can be accessed via SNA.

The following topics describe the special features of the *sideinfo* table on UNIX platforms, arising from the configuration of the respective SNA communications subsystem:

- AIX with *SNA Services* (IBM)
- HP-UX with *SNAplusLink* (HP)

SINIX with Transit:

If you are connecting a SINIX system to an SNA host, you need the SNA communications subsystem *Transit* from SNI.

In a transit environment you do not have to set up a side info table, as it is included in transit generation.

You will find details on transit generation in the section “Communications Subsystems for SNA” under SINIX: Transit [Seite 171]

AIX with SNA Services

On an AIX platform, the side info table contains the following parameters:

DEST	Symbolic destination with the number of the communication profi
LU	Communication profile of the line
TP	Name of the SAP transaction in the DC system • CICS: X1SA • IMS: xxxX1SA
GWHOST	Host, on which the SAP Gateway is running
GWSERV	SAP Gateway Service
PROTOCO	Protocol type I, E, C, F or R (see Side Info Parameters [Seite 93

Special feature

If you are implementing the SAP Gateway *(CPI-C Handler)* in an IBM environment, you must make an entry in the side info file for each communication profile.

Lines to the same partner must be numbered in ascending order (e.g. DEST=K50_1).

Examples for CICS

When implementing the CICS data communication system on the R/2 host, the following scenarios are possible:

- Scenario 1:

  A program written in C on the AIX platform communicates directly with the R/2 system (without the SAP Gateway) via CPI-C/LU6.2.
  The following parameters must be defined in the *sideinfo*:

  ```
  DEST=K50P
  LU=K50T00
  TP=X1SA
  ```

- Scenario 2:

  One of the following partners communicates with the R/2 host via the SAP Gateway:

  - The CUA interface
  - An R/3 ABAP program
  - A program written in C

  The host computer and the service of the SAP Gateway must be defined in the *sideinfo* of the calling system:

  ```
  DEST=K50
  GWHOST=is0001
  GWSERV=sapgw00
  PROTOCOL=C
  ```

  The following parameters must be defined in the *sideinfo* on the host computer of the SAP Gateway:

  ```
  DEST=K50_1
  LU=K50T01
  TP=X1SA

  DEST=K50_2
  LU=K50T02
  TP=X1SA

  DEST=K50_3
  LU=K50T03
  TP=X1SA
  ```

  If the calling program and the SAP program are on the same host computer, then there is only one *sideinfo* table with all the parameters detailed above.

Examples for IMS

When implementing the IMS data communications system on the R/2 host, the following scenarios are possible:

- Scenario 1:

  A program written in C on the AIX platform communicates directly with the R/2 system (without the SAP Gateway) via CPI-C/LU6.2.
  The following parameters must be defined in the *sideinfo*:

```
DEST=K50IMSP
LU=BRDGT00
TP=K50X1SA
```

- Scenario 2:

  One of the following partners communicates with the R/2 host via the SAP Gateway:

  – The CUA interface

  – An R/3 ABAP program

  – A program written in C

  The host computer and the service of the SAP Gateway must be defined in the *sideinfo* of the calling system:

```
DEST=K50IMS
GWHOST=is0001
GWSERV=sapgw00
PROTOCOL=C
```

  The following parameters must be defined in the *sideinfo* on the host computer of the SAP Gateway:

```
DEST=K50IMS_1
LU=BRDGT01
TP=K50X1SA

DEST=K50IMS_2
LU=BRDGT02
TP=X1SA

DEST=K50IMS_3
LU=BRDGT03
TP=K50X1SA
```

  If the calling program and the SAP program are on the same host computer, then there is only one *sideinfo* table with all the parameters detailed above.

HP-UX with *SNAplusLink*

On a HP-UX platform, the side info table contains the following parameters:

DEST	Symbolic name (destination) of the target system
GWHOST	System on which the SAP Gateway is running
GWSERV	SAP Gateway Service
PROTOCOL	Protocol type (see Section Side Info Parameters [Seite 93])
LU	*Remote LU6.2 Profile* of the SNA configuration
MODE_NAME	*Mode Name Profile* of the SNA configuration
TP	SAP transaction in a DC system: • CICS: X1SA • IMS: xxxX1SA

CPIC_TRACE	Trace switch: 0, 1, 2 or 3 (see environment variable *CPIC_TRACE*)
CONV_TYPE	Switch: • 1 = Mapped Conversation • 0 = Basic Conversation
KEEP_SESSION	Session switch for IMS: 1 or 0

Special Features

The parameter MODE_NAME must be defined. In the SNAplusLink configuration, the Local_LUs must be located in the default LU pool.

Examples for CICS

When implementing the CICS data communication system on the R/2 host, the following scenarios are possible:

- Scenario 1:

  A program written in C on the HP-UX platform communicates directly with the R/2 host (without the SAP Gateway) via **CPI-C**/LU6.2.

  ```
  DEST=K50P
  LU=K50T00
  TP=X1SA
  MODE_NAME=LU62TST1
  ```

- Scenario 2:

  One of the following partners communicates with the R/2 host via the SAP Gateway:

  – The CUA interface

  – An R/3 ABAP program

  – A program written in C

  The host computer and the service of the SAP Gateway must be defined on the calling system:

  ```
  DEST=K50
  GWHOST=is0001
  GWSERV=sapgw00
  PROTOCOL=C
  ```

  The following side info parameters must be defined on the host computer of the SAP Gateway:

  ```
  DEST=K50
  LU=K50T00
  TP=X1SA
  MODE_NAME=LU62TST1
  ```

  If the calling program and the SAP program are on the same host computer, then there is only one *sideinfo* table with all the parameters detailed above.

Examples for IMS

When implementing the IMS data communications system on the R/2 host, the following scenarios are possible:

- Scenario 1:

  A program written in C on the HP-UX platform communicates directly with the R/2 host (without the SAP Gateway) via **CPI-C**/LU6.2.

  ```
  DEST=K50IMSP
  LU=BRDGT00
  TP=K50X1SA
  MODE_NAME=LU62APPC
  ```

- Scenario 2:

  One of the following partners communicates with the R/2 host via the SAP Gateway:

  - The CUA interface
  - An R/3 ABAP program
  - A program written in C

  The host computer and the service of the SAP Gateway must be defined on the calling system:

  ```
  DEST=K50IMS
  GWHOST=is0001
  GWSERV=sapgw00
  PROTOCOL=C
  ```

  The following side info parameters must be defined on the host computer of the SAP Gateway:

  ```
  DEST=K50IMS
  LU=BRDGT00
  TP=K50X1SA
  MODE_NAME=LU62APPC
  ```

  If the calling program and the SAP program are on the same host computer, then there is only one *sideinfo* table with all the parameters detailed above.

SNA Subsystem Platforms on R/2

An R/2 ABAP program on an IBM host can start the following target programs via a communications program (on the computer with the SNA subsystem):

- ABAP programs of an R/3 System
- Programs written in C of an external system

Depending on the DC system you are implementing on the R/2 host, you will need one of the two R/2 communications programs provided by SAP:

- *gwhost* for CICS
- *gwims* for IMS

To use several target systems, you must declare the communications program to the SNA software by the different transaction program names (TP names) via Softlinks. The `XCOM` table on the R/2 host must contain the respective TP name.

If your R/2 System runs under BS2000, you start the target program as described in BS2000 Systems [Seite 190].

The process is as follows:

1. The R/2 ABAP program reads the TP name in the XCOM table and, under this name, starts the communications program on the SNA computer.
2. The communications program sets up a *conversation* with the SAP Gateway *(CPI-C Handler)*.
3. The SAP Gateway starts the actual target program. The computer on which it is located does not have to be known in the SNA network.

The communications program merely passes on the data during the CPI-C dialog.

You can use the communications programs *gwhost* and *gwims* to access computers **not** known in the SNA network, from an R/2 System on an IBM host.

The *sideinfo* side information table must be located on the platform with the SNA subsystem - the same platform as the communications program. In it you must define the following parameters:

DEST	Symbolic name of the target system (up to 8 characters)
GWHOST	Computer with the SAP Gateway
GWSERV	SAP Gateway Service
PROTOCOL	Protocol type I or E • I: R/3 is the partner system • E: An external program is the partner system
LU	Computer, on which R/3 or the external program is running
TP	SAP dispatcher or external partner program

Target System: R/3

An ABAP program on an IBM R/2 host communicates with an ABAP program of an R/3 System via the corresponding communication program. This is known to the SNA host under another name (example: gwbin).

The following table shows how the parameters in the sideinfo table on the SNA computer must be defined:

```
DEST=gwbin
GWHOST=is0001
GWSERV=sapgw00
PROTOCOL=I
LU=hs0011
TP=sapdp53
```

Target System: Non-SAP System

An ABAP program on an IBM R/2 host communicates with a program written in C in an external system via the corresponding transfer program, which is known to the SNA host under a different name (example: gwforext).

The following table shows how the parameters in the sideinfo table on the SNA computer must be defined:

```
DEST=gwforext
GWHOST=is0001
GWSERV=sapgw00
PROTOCOL=E
LU=iw10004
TP=rcvcpic
```

Environment Variables

Definition

The CPI-C interface can be influenced by the following environment variables. They are not available if you are implementing the SAP Gateway on the BS2000 host.

Structure

In the following the environment variables are listed with short explanations and value range.

- CPIC_MAX_CONV

  This variable defines the maximum number of CPI-C connections which the CPI-C API can administer.
  Default value: 100

- SIDE_INFO

  This variable defines the path and name of the side info table. Under UNIX and the SAP Gateway sets this variable in accordance with the value in the parameter *gw/side_info*.

  Default values for UNIX and AS/400: */usr/sap/<SAP System>/<instance>/data/sideinfo*

- CPIC_TRACE

  This variable sets the trace level of the CPI-C API.

  Values 0, 1, 2 or 3 are valid:

  0: No trace
  1: Error trace
  2: Complete process trace, short data trace
  3: Complete process and data trace

  UNIX:

  The trace files can be found in the work directory.

  Names of trace files:

  OS/2: CP<PID> TRC
  UNIX: CPICTRC<PID>
  WindowsNT: CPICTRC<PID>
  AS/400: CPICTRC<PID>
  (PID = Process number)
  Default value: 0

- CPIC_TRACE_DIR

  This variable determines the directory in which the CPI-C trace files are created.. By default, the trace files are created in the current directory.

- SAP_KEEP_SESSION

  This variable determines whether, after closing a LU6.2 connection, a session should be retained or be closed as well. (Side info parameter KEEP_SESSION).
  For an R/2 host with an IMS system, the existing session cannot be closed.

Environment Variables

Legal values:
0: Session is closed down
1: Session is retained in spite of instruction to the contrary

- CONVERT

  Variable for conversion table.

  If you do not want to use standard tables, this variable lets you define your own conversion table for ASCII-EBCDIC conversion.

  The CMCNVI and CMCNVO functions work with pre-defined standard tables.

- CPIC_TIMEOUT

  This variable determines the time span in seconds after which a timeout is triggered during a connection setup.

  Default value: 10

- CPIC_COMPATIBILITY

  This variable determines whether the CPI-C interface can work with SAP Gateways arbeiten of R/3 Releases prior to 3.0. By default, this is possible.
  In pure 3.0 installations, you can set this variable to the value 0. This setting will speed up error messaging during connection setup.

  Legal values:
  0: only SAP Gateways of R/3 Release 3.0
  1: SAP-Gateways of R/3 Releases prior to vor 3.0

If you are using SAP's SNC interface:

- SNC partner_sncname

  SNC name of the partner

- SNC_LIB mysnclib

  Name of the SNC library

Alternative: Define Side Info Parameters [Seite 114]

Side Info Table Hierarchy

Parameter values of the various side info tables take effect according to constellation. The following describes the two basic constellations.

- Source system is an SAP system
  - R/2 is the source system
  - R/3 is the source system
- Source system is a non-SAP system

Source system: SAP System

Here the source program can be distinguished as an ABAP program in R/2, or an ABAP program in R/3.

Source system: R/2

The hierarchy of the side info tables is as follows:

- R/2 is the target system:

  A connection to the R/2 partner system is set up via the parameter values DEST, LU and TP in the *XCOM* table.

- R/3 or an external system is the target system:

  a) A connection is set up to the SAP gateway on the gateway platform via the parameter values DEST, LU and TP in the *XCOM* table.

  b) The connection to the target system is set up via the *sideinfo* table on the gateway platform. Parameter value I or E for the protocol type defines the target system.

Source system: R/3

The target is defined via the protocol type in the side info table:

C: R/2 System
I: R/3 System
E: External system (start with *fork/exec*, Remote Shell or *rexec*)
F: Non-SAP program (started externally)
R: Non-SAP program (started after being registered at the SAP Gateway)

The hierarchy of the side info tables is as follows:

1. A connection is set up to the SAP gateway on the gateway platform via the parameter values of the *TXCOM* table.

   – R/2 is the target system:

     The parameter values for LU and TP in *TXCOM* are ignored. You must define them in the sideinfo table of the SAP gateway.

   – R/3 is the target system:

     If *TXCOM* contains all the necessary parameters, you cannot access the *sideinfo* table.

If *TXCOM* does not contain all the necessary parameters, then those missing are read from *sideinfo*.

– An external system is the target system:

  TXCOM must include protocol type E.

2. The connection to the target is set up via the *sideinfo* file on the gateway platform. Parameter value C, I, E, F or R for the protocol type defines the target system.

Source system: Non-SAP System

The connection to the target is set up via the *sideinfo* file on the gateway platform. The parameter value for the protocol type defines the target:

C: R/2 System
I: R/3 System
E: Non-SAP program (started by means of *fork/exec*, remote shell or *rexec)*R: Non-SAP program (started after being registered at the SAP Gateway)

Side Information in R/2 on MVS/VSE Host: XCOM

Definition

The side info table *XCOM*, on the IBM host in an SNA environment, contains the following elements:

- Symbolic destination

  You can enter up to 20 characters for the symbolic name of the target system.

- Name of the logical unit (LU) of the partner

  The following LU names must be firmly pre-defined in the DC system.

  – CICS: TERMINAL or CONNECTION name

  – IMS: LTERM name

- Name of the partner transaction program (TP)

  The TP name must be defined on the respective target system.

  – Only IMSASYNC is allowed for IMS with an LU6.2 adapter.

  – If the target system is an R/3 system, the TP name must agree with the definition of the parameter DEST in the side info table *sideinfo* of the gateway computer. (See the section Parameters on SNA Subsystem Platforms with R/2 [Seite 105]).

XCOM table on the SNA host

Symbolic destination	LU	TP
PPS_SYSTEM	CA12	EXTPGM
SAPTEST	SAPT	X1SA
CPICTEST	CA13	CPICRCV
IMS2EXT	LTREB24	IMSASYNC

Side Information in R/2 on BS2000 Host: XCOM

Definition

On the BS2000 host, the **XCOM** table is used to assign logical partner names to their LU and TP names. This makes you independent of generation parameters when programming (for example in the ABAP program). You can therefore transfer the program, without changes, from a test system into a productive system. The XCOM table has the following structure:

***XCOM* table parameters:**

Name	Type	Length	Description
SDEST	CHAR	20	Symbolic destination (Key field)
LU	CHAR	8	Name of the logical unit
TP	CHAR	8	Name of the transaction program
CTYPE	CHAR	1	Communication type

Integration

Parameters for UTM-UTM Connections

In UTM implementations, the LU name corresponds to the LPAP name, with which the UTM partner application is addressed. The TP name corresponds to the LTAC name, with which the remote UTM partial program is addressed.

The UTM partial program is started by the partner application after the ABAP program has relocated the first RECEIVE call.

The LPAP name is therefore registered in the LU field, and the local TAC of the remote application (LTAC) is registered in the TP field.

Under UTM, the third parameter of Table XCOM (CTYPE) is also used. It has the following values depending on the communication types:

A

Asynchronous message transfer

The queue driver transfers DOUT queue messages as asynchronous UTM messages. As of UTM Version 3.3, synchronous communication is supported.

D

Direct message transfer

Messages are sent via the APQ interface as UTM-D messages directly without buffering in the DOUT file.

Prerequisites:
The partner is a UTM application. If the interface is used in an update task, no separate update task is allowed.

H

Gateway-to-host communication

Communication takes place via a GWHOST task. This parameter value is required if you use component 83, as a UTM-D communication is initiated by default.

K

SAP leaves the transaction open and ends the transaction step with PEND KP (standard: PEND RE)(from 5.0 G)

Parameters for GWHOST Connections

If communication to an R/3 System or a non-SAP program takes place via the *gwhost* program, the XCOM parameters have the following meaning:

SDEST

Symbolic destination used in the ABAP program

LU

Non-relevant

TP

Destination with which the Job SAPGWHO (program *gwhost*) determines further directions in the side information file (SAPGW.DATA.SIDEINFO)

An example of table XCOM settings for the *gwhost* program can be found under Connection Setup by the R/2 System [Seite 206].

Side Information on OS/2, WindowsNT, UNIX and AS/400 Platforms: sideinfo

Definition

On an OS/2, UNIX or WindowsNT platform, the connection parameters are placed in the *sideinfo* side information file.

The file *sideinfo* serves as a model for your own definitions. Adapt this file to meet your own requirements.

For an R/3 platform, the TXCOM side info table is also available in the database. For an SNA connection the parameters LU and TP in TXCOM are ignored.

The directory which holds the *sideinfo* file is determined as follows:

- **Alternative 1:**

  The environment variable SIDE_INFO [Seite 107] is defined for the path of the side info table.

  Under UNIX, this environment variable is assigned the value of the *gw/side_info* profile parameter when the SAP Gateway is started. For further details on profile parameters, refer to Defining the SAP Gateway [Seite 44].

  gw/side_info default value: /usr/sap/<SAP System>/<instance>/data/sideinfo

- **Alternative 2:**

  The SIDE_INFO environment variable is not defined.
  The *sideinfo* file must be located in the current working directory of the calling program.

Integration

For more information, refer to the following topics:

- General Parameters [Seite 95]
- Platform-specific Parameters for SNA Connection: OS/2 [Seite 97]
- Platform-specific Parameters for SNA Connection: UNIX [Seite 100]
- Parameters on SNA Subsystem Platform With R/2 [Seite 105]

Side Information In R/3: TXCOM

Definition

There is a side info table called *TXCOM* in the database of each R/3 System. It contains the following column headings:

Dest

Destination
Symbolic name of the target system
(up to 8 characters)

LU

Logical unit
(up to 8 characters)

TP

Transaction program
(up to 8 characters)

Prot

Protocol type (1 character)

The following protocol types are possible:

C:	The partner program is an ABAP program in R/2.
I:	The partner program is an ABAP program in R/3, which can be accessed via TCP/IP.
E:	The partner program is a C program, which can be accessed via TCP/IP and started by means of fork/exec, remote shell or rexec.
F:	The partner program is a C program, which can be accessed via TCP/IP and started externally (for example, by the R/3 Frontend or an R/3 Server).
R:	The partner program is a C program, which can be accessed via TCP/IP and has registered at the SAP-Gateway.

Gateway host

Host computer of the SAP Gateway
(up to 20 characters)
If the computer name is longer, you must define a symbolic computer name in the *THOST* table.

Gateway service

SAP Gateway service
(up to 20 characters)

Use

The table txcom must be configured according to the target system:

Target System: R/3

Two ABAP programs on two R/3 servers (BIN and B20), located on the same computer, communicate with one another.

The connection parameters must be defined in the TXCOM side info table. If the target system is an R/3 System Release 2.1 or higher, you can also specify sapgw<nr> under TP.

The following table has examples of values.

```
DEST   LU       TP       Prot    Gateway-Host   Gateway-Service
-------------------------------------------------------------
bin    hs0001   sapdp53  I       is0001         sapgw00
b20    hs0001   sapdp21  I       is0001         sapgw00
DEST21 hw0002   sapgw53  I         -               -
```

Target System: R/2 (MVS/VSE Host)

An ABAP program of an R/3 System communicates with an ABAP program of an R/2 System on a MVS/VSE host.

- The connection parameters must be defined in the R/3 table TXCOM.

  Example:

  ```
  DEST   LU     TP     Prot    Gateway-Host   Gateway-Service
  ---------------------------------------------------------
  S50    S50   X1SA     C        is0001         sapgw00
  K50    K50   X1SA     C        is0002         sapgw01
  ```

  The LU parameter value in TXCOM is of no relevance to R/3 to R/2 communication.

- Additional connection parameters must be defined in the *sideinfo* file on the SNA gateway host. The LU parameter value comes from the configuration profile of the SNA communication subsystem.

  Example:

  ```
  DEST=50
  LU=K50T00
  TP=X1SA
  ```

  For more details, refer to the topic Side Information on OS/2, Windows NT, UNIX and AS/400 Platforms: . Sideinfo [Seite 114]

Target System: R/2 (BS2000 Host)

An ABAP program of an R/3 System communicates with an ABAP program of an R/2 System on a BS2000 host with the SAP Gateway under DCAM.

- The connection parameters must be defined in the R/3 table TXCOM.

  Example:

  ```
  DEST    LU       TP     Prot   Gateway-Host   Gateway-Service
  ----------------------------------------------------------
  BS2S50  BS2S50   X1SA    C        sb0002         sapgw02
  BS2K50  BS2K50   X1SA    C        sb0002         sapgw02
  ```

- If the file SAPGW.DATA.SIDEINFO exists in the BS2000 host, the R/2 System can only be reached if this file contains a corresponding entry.

For more details, refer to the topic Maintaining the Side Info File in BS2000 [Seite 204] in the section “BS2000 Host Systems”.

Target System: Non-SAP System

An ABAP program of an R/3 system communicates with a program written in C of an external system.

The protocol type for this type of communication must be **E**, as the partner program is located outside the SAP system and can be accessed via TCP/IP.

In the following side info example, the SAP Gateway and the target system are on different computers. The SAP Gateway starts the program written in C using *Remote Shell*.

For this the following requirements must be met:

- The SAP Gateway ID must be available on the target computer.
- The file *.rhosts* must be available in the home directory of the SAP Gateway ID on the target computer. The gateway computer must be registered in the file *.rhosts*. The program written in C or a Softlink must also be available in the home directory.
- The connection parameters must be defined in the TXCOM side info table. The following table has examples of values.

```
/* C Program: rcvcpic     */
DEST      LU       TP       Prot  Gateway host  gateway service
-----------------------------------------------------------------
rcvcpic   iw10004  rcvcpic  E     is0001        sapgw00
```

Maintaining MVS/VSE Host Systems

Prerequisites

To integrate a workstation in a host SNA network, in which CICS or IMS is running under MVS and VTAM, you have to define a series of parameters on the host.

For more detailed information on configuration, refer to the original documentation on the communications subsystem you are using.

Prior knowledge of defining the resources in VTAM and defining applications in CICS or IMS are assumed. You should also be familiar with R/2 System administration.

Software Requirements

Before installing the R/2 workstation software, check that your system constellation meets the requirements detailed below.

The software requirements given are minimum specifications. SAP gives no guarantee regarding software from other manufacturers.

The hardware requirements for the R/2 System are not described here. These are described in the system documentation for the R/2 System.

The specifications are for the current price list components. When this documentation was released, the following specifications were valid:

Software requirements for the IBM host:

Software component	Requirements
Operating systems	MVS ESA, MVS XA MVS SP (limited), VSE (limited)
Data communications systems	CICS 1.7 or IMS 1.3 + LU 6.1 + Adapter
Network operating system	ACF/VTAM Version 3.1
R/2	Release 4.3H, 4.4, 5.0

Procedure

VTAM Definitions

This topic shows the parameter values for various VTAM instructions and macros, which you have to adapt for communication via LU 6.2.

The statements in angle brackets *(<LU62SAP1>)* are SAP example values. You must adapt these values to your system constellation.

Details:

Defining a CICS Application [Seite 120]

Defining an IMS Application [Seite 121]

Defining Logon Mode Table Entries [Seite 122]

Defining a CICS Application

To define CICS in VTAM with LU 6.2 capability in VTAM, code an APPL instruction based on the following:

```
<cicspl> APPL AUTH=(ACQ,VPACE,PASS),
                  ACBNAME=<cicspl>,
                  VPACING=1,
                  PARSESS=YES,
                  SONSCIP=YES,
                  MODETAB=<LU62TAB>
```

- The parameter entry for ACBNAME must be identical to the CICS parameter APPLID in the CICS table DFHSIT.
- The parameter entry for MODETAB determines the name of the "Logmode table". In VTAM there must be a Modetab entry with this name.

Defining an IMS Application

To define IMS in VTAM with LU6.2 capability, code two APPL instructions:

- an APPL instruction for IMS itself
- an APPL instruction for the LU 6.1 adapter for LU 6.2

```
<IMS4>   APPL  AUTH=(ACQ),PARSESS=YES,EAS=100,  IMS
<APPCBRDG>     APPL  AUTH=(ACQ),PARSESS=YES,EAS=100,  IMS
Adapter
```

Defining Logon Mode Table Entries

The Logon Mode table defined by the MODETAB parameter contains the session parameters required by the workstations. Define the transfer session for the LU6.2 communication for your DC system.

Logon Mode table entries for CICS

To connect a workstation to CICS, define a *Logon Mode* in your VTAM Logon Mode table. Use the following example:

```
<LU62SAP1> MODEENT LOGMODE=<LU62SAP1>,
                  Type=00
                  FMPROF=X'13',
                  TSPROF=X'07',
                  PRIPROT=X'B0',
                  SECPROT=X'B0',
                  COMPROT=X'50B1',
                  SSNDPAC='3F'
                  PRCVPAC='3F'
                  SRCVPAC='3F'
                  RUSIZES=X'8787',
                  PSERVIC=X'06020000000000000002C00'
```

The SAP example value for the LOGMODE parameter is LU62SAP1. If you are using another value, it has to match the value of the VTAM parameter MODETAB.

The parameter entry for RUSIZES must match the parameter entry for SENDSIZE defined in CICS.

In this LOGMODE we recommend that, for optimum performance, you set the parameters as follows for both directions:
Block size: 1024 (X'8787: 87: $8*2^7$ = 1024, therefore 8787 for both directions)
Pacing values: 63 (hex: 3F)

Logon Mode Table entries for IMS

To connect a workstation to IMS, you must make two Logon Mode definitions for the following sessions:

- Session between the IMS LU-6.1 adapter (bridge) and IMS
- Session between the adapter and workstation

Define a Logon Mode in your VTAM Logmode Table. Use the following example:

```
* for LU 6.1 adapter *
LU6NEGS MODEENT LOGMODE=LU6NEGS,
                FMPROF=X'12',TSPROF=X'04',TYPE=X'00',
                PRIPROT=X'B1',SECPROT=X'B1',COMPROT=X'70A0',
                RUSIZES=X'F8F8',PSERVIC=X'060038000000380000000000'
* for IMS itself *
LU62SAP1 MODEENT LOGMODE=LU62SAP1,
                 FMPROF=X'13',TSPROF=X'07',TYPE=X'00',
                 PRIPROT=X'B0',SECPROT=X'B0',COMPROT=X'50B5',
                 SSNDPAC=‘3F’, PRCVPAC=‘3F’,SRCVPAC=‘3F’
                 RUSIZES=X'8787,PSERVIC=X'06020000000000000002F00'
```

In this LOGMODE we recommend that, for optimum performance, you set the parameters as follows for both directions:

Block size:	1024 (X'8787: 87: $8*2^7$ = 1024, therefore 8787 for both directions)
Pacing values: 63	(hex: 3F)

Defining a Communications Line

To define the line groups and lines of the workstations which you want to insert in the network, code the corresponding GROUP and LINE instructions (statements).

As the R/2 workstation software can be installed both for SDLC connections and LAN/gateway, you must define the group lines and nodes accordingly. The following examples show you how to define the R/2 workstation software for SDLC or LAN connections.

In this example an SDLC communications line is defined for the PU (physical unit) PTRJA0.

```
GRST     GROUP ANS=CONTINUE,
               DLOGMOD=LU62SAP1,
               LNCTL=SDLC,
               MAXOUT=7,
               MAXPU=7,
               MODETAB=LU62TAB,
                  :
LNST     LINE ADDRESS = (03,FULL)
                  :
```

SAP uses the Mode name *LU62SAP1*. If it is necessary to change the Mode names, then the parameter entries for DLOGMOD and MODETAB must correspond to the parameter entry for Logmode and the Logmode Table in VTAM.

Defining Resources for the Workstation

Code the corresponding PU und LU instructions for the workstations to be defined. Use the following example:

```
PTRJA0    PU    ADDR=C2,
                ISTATUS=ACTIVE,
                MAXDATA=1033,        ((RUSIZES=1024 + 9)
                PUDR=YES
                   . . .
LU00000   LU    LOCADDR=1, DLOGMODE=<LU62SAP1>
LU00001   LU    LOCADDR=2, DLOGMODE=<LU62SAP1>
```

Using CICS Definitions

This topic tells you which CICS parameters you have to define to make workstation-host communication via LU6.2 possible..

When using external security systems (RACF, ACF2) you can change the parameters *Terminal* and *Connection* (see ATtachsec=Verify).

When setting up a connection (ATTACH), the partner system must send a valid combination of user name and password. This is not supported by every SNA LU6.2 subsystem.

A CICS system needs special RDO definitions for connection setup.

You can choose between the following alternatives:

- Defining a Connection and Sessions [Seite 127]

  (Parameters CONNECTION and SESSIONS)

- Defining Terminal Type and Terminal [Seite 129]

  (Parameters TERMINAL and TYPETERM, only SINGLE Session)

You must also make the following definitions:

- Defining the Start Transaction for the SAP System [Seite 131]
- Setting the Initialization Table DFHSIT [Seite 132]

You can define the resources in the CSD file via RDO (Resource Definition Online), or in the corresponding tables with the help of macros. Definition via RDO is shown in the following examples.

The statements in angle brackets *(<LU62SAP1>)* are SAP example values. You must adapt these values to your system constellation.

Defining a Connection and Sessions

Defining a Connection

With the CICS-CEDA transaction, define a connection *(Connection)* for LU6.2 communication. Use the following example:

```
      OBJECT CHARACTERISTICS
       CEDA  View
       Connection     : S50C         (alias, identical for definition
of sessions)
       Group          : SAPLU62
       DEscription    :
      CONNECTION IDENTIFIERS
       Netname        : LU000000
       INDsys         :
      REMOTE ATTRIBUTES
       REMOTESystem   :
       REMOTEName     :
      CONNECTION PROPERTIES
       ACcessmethod   : Vtam   Vtam ! IRc ! INdirect ! Xm
       Protocol       : Appc   Appc ! Lu61
       SInglesess     : Yes     No ! Yes
       DAtastream     : User   User ! 3270 ! SCs ! STrfield ! Lms
       RECordformat   : U      U ! Vb
      OPERATIONAL PROPERTIES
    +  AUtoconnect    : No    No ! Yes ! All
    +  INService      : Yes    Yes ! No
      SECURITY
       SEcurityname   :
       ATtachsec      : Local  Local ! Identify ! Verify
       Bindpassword   :        PASSWORD NOT SPECIFIED
```

Defining Sessions

With the CICS-CEDA transaction, define the sessions for LU6.2 communication. Use the following example:

```
 OBJECT CHARACTERISTICS
  CEDC  View
   Sessions       : S50SESSP
   Group          : CICSLU62
   DEscription    :
  SESSION IDENTIFIERS
   Connection     : S50C
   SESSName       :
   NETnameq       :
   MOdename       : LU62SAP1
  SESSION PROPERTIES
   Protocol       : Appc           Appc ! Lu61
   MAximum        : 001, 000      0-999
   RECEIVEPfx     :
   RECEIVECount   :                1-999
   SENDPfx        :
```

Defining a Connection and Sessions

```
   SENDCount       :                1-999
   SENDSize        : 0102          1-30720
+  RECEIVESize     : 0102          1-30720
+  SESSPriority    : 000            0-255
  OPERATOR DEFAULTS
   OPERId          :
   OPERPriority    : 000            0-255
   RESseckeys      : 0              0-24,...
   Transeckeys     : 1-64           1-64,...
   USERId          :
  OPERATIONAL PROPERTIES
   Autoconnect     : Yes             No ! Yes ! All
   INservice       :                No ! Yes
   Buildchain      : Yes            Yes ! No
   USERArealen     : 000            0-255
   IOarealen       : 00000, 00000  0-32767
   RELreq          : No             No ! Yes
   DIscreq         : No             No ! Yes
   NEPclass        : 000            0-255
+ RECOVERY
+  RECOVOption     : Sysdefault     Sysdefault ! Clearconv ! Releases
                                    ! Uncondrel ! None
   RECOVNotify     : None           None ! Message ! Transaction
```

Defining Terminal Type and Terminal

Defining a Terminal Type

With the CICS-CEDA transaction, define a terminal type for LU 6.2 communication. Use the following example:

```
OBJECT CHARACTERISTICS
 CEDA  View
  TYpeterm          : LU62
  Group             : SAPLU62
 RESOURCE TYPE
  DEVice              : APPC
:
:
:
 SESSION PROPERTIES
  AScii                : No                  No ! 7 ! 8
  SENdsize             : 00256               0-30720
  RECeivesize          : 00256               0-30720
  BRacket              : Yes                 Yes ! No
  LOGMode              :
```

IBM normally delivers Typeterm models in the *CSD file*.These can be used as examples.

Defining a Terminal

Define a terminal entry for each *Logical Unit* required on the workstation. You do not need any predefinitions for SINGLE session connections, which are always set up from the partner side to CICS. Instead, you can use CICS AUTOINSTALL.

```
OBJECT CHARACTERISTICS
 CEDA  View
  TErminal              : <LU00>
  Group                 : SAPLU62
  AUTINSTModel          : No                  No ! Yes ! Only
  AUTINSTName           :
 TERMINAL IDENTIFIERS
  TYpeterm              : LU62
  Netname               : <LU000000>
  SYSIDNT=xxxx
  Console               : No                  No ! 0-99
  REMOTESystem          :
  REMOTEName            :
  Modename              : <LU62SAP1>
```

This terminal has the net name LU000000, which was defined in the VTAM LU instruction. The statement SYSIDNT=xxxx corresponds to the statement of the *Logical Unit* in the XCOM table.

Defining the Start Transaction for the SAP System

The LU6.2 CICS start transaction must be defined inside the required CICS region. This transaction starts the SAP LU 6.2 Dispatcher in the SAP system (SAPTHCI).

With the CICS-CEDA transaction, define a CICS transaction for the SAPTHCI program named X1SA. Use the following example:

```
OBJECT CHARACTERISTICS
 CEDA  View
  TRansaction     : <X1SA>
  Group           : SAPLU62
  PROGram         : <SAPTHCI>
  TWasize         : 00000                 0-32767
  PROFile         : DFHCICST
  PArtitionset    :
  STatus          : Enabled               Enabled ! Disabled
  PRIMedsize      : 00000                 0-65520
```

Setting the Initialization Table DFHSIT

For communication between the host and workstation, an entry must be set in the *System Initialization Table* (DFHSIT).

Set the ISC parameter *(Inter-Systems Communication)* to YES:

ISC=<YES>

This entry is valid from CICS Version 1.7.

TCP=S$
**ZCP=S$** Only S$ supports LU6.2.

Using IMS Definitions

To define a workstation in IMS, you must make the following definitions in IMS:

- Adapting Specific Parameters to the Sending Block [Seite 134]
- Define the LU 6.1 adapter for LU 6.2 as a terminal (see the IMS guide). Defining an LU6.1 Adapter [Seite 135]
- Define each independent workstation as a SUBPOOL in the VTAMPOOL. Defining a Terminal [Seite 136]
- Define the LU 6.2 carrier transaction when starting the system. Defining the Start Transaction for the SAP System [Seite 137]

The statements in angle brackets *(<S50X1SA>)* are SAP example values. Adapt them to your system constellation.

For further details please refer to the IBM guide "LU6.2 Applications: Program Description/Operations".

Adapting Specific Parameters to the Sending Block

You must align the following specific parameters with the maximum size of a sending block, otherwise an internal IMS segmentation will take place or the system will terminate.

IMS generation parameters:

```
COMM     :   RECANY=(4,8192)      SIZE RECEIVE-ANY BUFFERS
TERMINAL:    OUTBUF=8192          (IMS SEND)
TRANSACT:    SEGSIZE=00000        (no limit)
MSGQUEUE:    RECLNG=(512,8192)    LRECL SHMSG+LGMSG
```

SAP installation parameters:

```
SAPZCSA :    ZCSAMSGL=16384       (internal SAP BUFFER)
```

For the values detailed, the headers used internally by IMS are ignored.

The length of the internal SAP buffer selected should be at least twice that of the IMS parameter. It should also be aligned to word length.

Defining an LU6.1 Adapter

Make an entry for the LU6.1 adapter for LU6.2 in the *Terminal Definition*.Use the following example:

```
* Type of all following terminals: LU6
TYPE          UNITYPE   =LUTYPE6

TERMINAL      NAME      =<APPCBRDG>,COMPT1=(SINGLE1,VLVB),
              OPTIONS   =(TRANRESP,MTOMSG),
              OUTBUF    =8192,
              SESSION   =100,
            ...
```

Defining a Terminal

For each workstation make a SUBPOOL entry in the VTAMPOOL definition. Use the following example:

```
VTAMPOOL
      SUBPOOL NAME=<LU00001>
      NAME <LU00001>
      SUBPOOL NAME=<LU00002>
      NAME <LU00002>
     ...
```

Defining the Start Transaction for the SAP System

When starting the SAP system, make an entry for the LU6.2 carrier transaction in the TRANSACT definition. Use the following example:

```
TRANSACT CODE=(<S50X1SA>),
                MSGTYPE=(MULTSEG,RESPONSE,030),
                SPA=(00128,CORE,FIXED),
                SEGSIZE=0000,
              ...
```

The value for the SEGSIZE parameter must be set to 00000 (no limit).

Enhancements to the CUA Interface

The following enhancements have been made to the CUA Interface [Extern].

More CUA Interfaces on CICS

The maximum number of CUA Interfaces in a CICS is no longer limited by the maximum number of 999 CICS tasks.

From R/2 Release 5.0 D (or 5.0C with 5.0C maintenance level), the connection to the terminals can be operated as for "dumb" terminals "non conversational". This means that throughout short-running transactions, CICS resources are only in use for a short period and are then released. This makes it possible to increase the maximum number of CUA Interfaces running parallel on a CICS.

Reduced Message Length in IMS

From Version 1.6 of the CUA interface under UNIX and Version 1.031 under OS/2:The CUA server can also operate connections to IMS systems, where the IMS Long Message is set to a value smaller than 16MB. For this purpose, the SEGSIZE parameter must however be set to 00000 (no limit).

Communications Subsystems for SNA

You can use the following communications subsystems on the platforms supported:

AIX: SNA Server

An AIX computer can communicate with an SNA mainframe. The AIX system is integrated in the host SNA network through the configuration of the communications subsystem.

You can find detailed information on installation and configuration of *SNA Services* in the relevant IBM product documentation.

SNA Configuration Example for Connections between R/2 and R/3

For a complete and consistent example configuration, see the following topic:

Connecting R/3 and R/2 on an IBM Host [Seite 222]

The following example illustrates the configuration of various connections between R/3 and R/2 Systems under CICS and IMS:

1. R/3 → R/2 (CUA) under CICS
2. R/3 → R/2 (CUA) under IMS
3. R/2 →R/3 (R/2 with CICS; R/3-System C11, where tp=GWHSTC11)
4. R/2 →R/3 (R/2 with IMS; R/3-System C11, where tp=IMSASYNC)

```
 sna:
      prof_name                                       = "sna"
      max_sessions                                    = 200
      max_conversations                               = 200
      restart_action                                  = once
      rrm_enabled                                     = no
      dynamic_inbound_partner_lu_definitions_allowed = yes
      standard_output_device                          = "/dev/console"
      standard_error_device                           =
"/var/sna/sna.stderr"
      nmvt_action_when_no_nmvt_process                = reject
      comments                                        = ""

control_pt:
      prof_name                                       = "node_cp"
      xid_node_id                                     = "*"
      network_name                                    = "DESAPW00"
      control_pt_name_alias                           = "PTRMRB"
      control_pt_name                                 = "PTRMRB"
      control_pt_node_type                            = appn_end_node
      max_cached_trees                                = 500
      max_nodes_in_topology_database                  = 500
      route_addition_resistance                       = 128
      comments                                        = ""

local_lu_lu6.2:
      prof_name                                       = "LTRMRB1"
      local_lu_name                                   = "LTRMRB1"
      local_lu_alias                                  = "LTRMRB1"
```

```
      local_lu_dependent                          = yes
      local_lu_address                            = 1
      sscp_id                                     = *
      link_station_prof_name                      = "token"
      conversation_security_list_profile_name     = ""
      comments                                    = ""

local_lu_lu6.2:
      prof_name                                   = "LTRMRB2"
      local_lu_name                               = "LTRMRB2"
      local_lu_alias                              = "LTRMRB2"
      local_lu_dependent                          = yes
      local_lu_address                            = 2
      sscp_id                                     = *
      link_station_prof_name                      = "token"
      conversation_security_list_profile_name     = ""
      comments                                    = ""

local_lu_lu6.2:
      prof_name                                   = "LTRMRB3"
      local_lu_name                               = "LTRMRB3"
      local_lu_alias                              = "LTRMRB3"
      local_lu_dependent                          = yes
      local_lu_address                            = 3
      sscp_id                                     = *
      link_station_prof_name                      = "token"
      conversation_security_list_profile_name     = ""
      comments                                    = ""

partner_lu6.2:
      prof_name                                   = "K50-CICS"
      fq_partner_lu_name                          = "DESAPW00.K50"
      partner_lu_alias                            = "K50"
      session_security_supp                       = no
      parallel_session_supp                       = yes
      conversation_security_level                 = none
      comments                                    = ""

partner_lu6.2:
      prof_name                                   = "IMS"
      fq_partner_lu_name                          =
"DESAPW00.APPCBRDG"
      partner_lu_alias                            = "APPCBRDG"
      session_security_supp                       = no
      parallel_session_supp                       = yes
      conversation_security_level                 = none
      comments                                    = ""

side_info:
      prof_name                                   = "K5001"
      local_lu_or_control_pt_alias                = "LTRMRB1"
      partner_lu_alias                            = "K50"
      fq_partner_lu_name                          = ""
```

AIX: SNA Server

```
      mode_name                                       = "LU62CPIC"
      remote_tp_name_in_hex                           = no
      remote_tp_name                                  = "X1SA"
      comments                                        = ""

side_info:
      prof_name                                       = "K5002"
      local_lu_or_control_pt_alias                    = "LTRMRB2"
      partner_lu_alias                                = "K50"
      fq_partner_lu_name                              = ""
      mode_name                                       = "LU62CPIC"
      remote_tp_name_in_hex                           = no
      remote_tp_name                                  = "X1SA"
      comments                                        = ""

side_info:
      prof_name                                       = "K5003"
      local_lu_or_control_pt_alias                    = "LTRMRB3"
      partner_lu_alias                                = "K50"
      fq_partner_lu_name                              = ""
      mode_name                                       = "LU62CPIC"
      remote_tp_name_in_hex                           = no
      remote_tp_name                                  = "X1SA"
      comments                                        = ""

side_info:
      prof_name                                       = "K50IMS01"
      local_lu_or_control_pt_alias                    = "LTRMRB1"
      partner_lu_alias                                = "APPCBRDG"
      fq_partner_lu_name                              = ""
      mode_name                                       = "LU62CPIC"
      remote_tp_name_in_hex                           = no
      remote_tp_name                                  = "K50X1SA"
      comments                                        = ""

side_info:
      prof_name                                       = "K50IMS02"
      local_lu_or_control_pt_alias                    = "LTRMRB2"
      partner_lu_alias                                = "APPCBRDG"
      fq_partner_lu_name                              = ""
      mode_name                                       = "LU62CPIC"
      remote_tp_name_in_hex                           = no
      remote_tp_name                                  = "K50X1SA"
      comments                                        = ""

side_info:
      prof_name                                       = "K50IMS03"
      local_lu_or_control_pt_alias                    = "LTRMRB3"
      partner_lu_alias                                = "APPCBRDG"
      fq_partner_lu_name                              = ""
      mode_name                                       = "LU62CPIC"
      remote_tp_name_in_hex                           = no
      remote_tp_name                                  = "K50X1SA"
```

```
      comments                                          = ""

local_tp:
      prof_name                                         = "GWHSTC11"
      tp_name                                           = "GWHSTC11"
      tp_name_in_hex                                    = no
      pip_data_present                                  = no
      pip_data_subfields_number                         = 0
      conversation_type                                 = either
      sync_level                                        = none/confirm
      resource_security_level                           = none
      resource_access_list_profile_name                 = ""
      full_path_tp_exe                                  =
"/usr/sap/C11/SYS/exe/run/GWHSTC11"
      multiple_instances                                = yes
      user_id                                           = 200
      server_synonym_name                               = ""
      restart_action                                    = once
      communication_type                                = signals
      ipc_queue_key                                     = 0
      standard_input_device                             = "/dev/console"
      standard_output_device                            = "/dev/console"
      standard_error_device                             = "/dev/console"
      comments                                          = ""

local_tp:
      prof_name                                         = "IMSASYNC"
      tp_name                                           = "IMSASYNC"
      tp_name_in_hex                                    = no
      pip_data_present                                  = no
      pip_data_subfields_number                         = 0
      conversation_type                                 = either
      sync_level                                        = none/confirm
      resource_security_level                           = none
      resource_access_list_profile_name                 = ""
      full_path_tp_exe                                  =
"/usr/sap/C11/SYS/exe/run/gwims"
      multiple_instances                                = yes
      user_id                                           = 200
      server_synonym_name                               = ""
      restart_action                                    = once
      communication_type                                = signals
      ipc_queue_key                                     = 0
      standard_input_device                             = "/dev/console"
      standard_output_device                            = "/dev/console"
      standard_error_device                             = "/dev/console"
      comments                                          = ""

local_tp:
      prof_name                                         = "CCPICT2S"
      tp_name                                           = "CCPICT2S"
      tp_name_in_hex                                    = no
      pip_data_present                                  = no
```

AIX: SNA Server

```
      pip_data_subfields_number                        = 0
      conversation_type                                = either
      sync_level                                       = none/confirm
      resource_security_level                          = none
      resource_access_list_profile_name                = ""
      full_path_tp_exe                                 =
"/usr/sap/C11/SYS/exe/run/ccpict2s"
      multiple_instances                               = yes
      user_id                                          = 200
      server_synonym_name                              = ""
      restart_action                                   = once
      communication_type                               = signals
      ipc_queue_key                                    = 0
      standard_input_device                            = "/dev/console"
      standard_output_device                           = "/dev/console"
      standard_error_device                            = "/dev/console"
      comments                                         = ""

link_station_token_ring:
      prof_name                                        = "token"
      use_control_pt_xid                               = no
      xid_node_id                                      = "*"
      sna_dlc_profile_name                             = "token"
      stop_on_inactivity                               = no
      time_out_value                                   = 0
      LU_registration_supported                        = no
      LU_registration_profile_name                     = ""
      link_tracing                                     = no
      trace_format                                     = long
      access_routing_type                              = link_address
      remote_link_name                                 = ""
      remote_link_address                              = 0x400072a3ffff
      remote_sap                                       = 0x04
      verify_adjacent_node                             = no
      net_id_of_adjacent_node                          = ""
      cp_name_of_adjacent_node                         = ""
      xid_node_id_of_adjacent_node                     = "*"
      node_type_of_adjacent_node                       = learn
      solicit_sscp_sessions                            = yes
      call_out_on_activation                           = yes
      activate_link_during_system_init                 = yes
      activate_link_on_demand                          = no
      cp_cp_sessions_supported                         = no
      cp_cp_session_support_required                   = no
      adjacent_node_is_preferred_server                = no
      initial_tg_number                                = 0
      restart_on_normal_deactivation                   = no
      restart_on_abnormal_deactivation                 = no
      restart_on_activation                            = no
      TG_effective_capacity                            = 4300800
      TG_connect_cost_per_time                         = 0
      TG_cost_per_byte                                 = 0
      TG_security                                      = nonsecure
```

```
        TG_propagation_delay                          = lan
        TG_user_defined_1                             = 128
        TG_user_defined_2                             = 128
        TG_user_defined_3                             = 128
        comments                                      = ""

sna_dlc_token_ring:
        prof_name                                     = "token"
        datalink_device_name                          = "tok0"
        force_timeout                                 = 120
        user_defined_max_i_field                      = no
        max_i_field_length                            = 30729
        max_active_link_stations                      = 100
        num_reserved_inbound_activation               = 0
        num_reserved_outbound_activation              = 0
        transmit_window_count                         = 16
        dynamic_window_increment                      = 1
        retransmit_count                              = 8
        receive_window_count                          = 8
        priority                                      = 0
        inact_timeout                                 = 48
        response_timeout                              = 4
        acknowledgement_timeout                       = 1
        link_name                                     = ""
        local_sap                                     = 0x04
        retry_interval                                = 60
        retry_limit                                   = 20
        dynamic_link_station_supported                = no
        trace_base_listen_link_station                = no
        trace_base_listen_link_station_format         = long
        dynamic_lnk_solicit_sscp_sessions             = yes
        dynamic_lnk_cp_cp_sessions_supported          = yes
        dynamic_lnk_cp_cp_session_support_required    = no
        dynamic_lnk_TG_effective_capacity             = 4300800
        dynamic_lnk_TG_connect_cost_per_time          = 0
        dynamic_lnk_TG_cost_per_byte                  = 0
        dynamic_lnk_TG_security                       = nonsecure
        dynamic_lnk_TG_propagation_delay              = lan
        dynamic_lnk_TG_user_defined_1                 = 128
        dynamic_lnk_TG_user_defined_2                 = 128
        dynamic_lnk_TG_user_defined_3                 = 128
        comments                                      = ""

mode:
        prof_name                                     = "LU62CPIC"
        mode_name                                     = "LU62CPIC"
        max_sessions                                  = 8
        min_conwinner_sessions                        = 4
        min_conloser_sessions                         = 0
        auto_activate_limit                           = 0
        max_adaptive_receive_pacing_window            = 16
        receive_pacing_window                         = 16
        max_ru_size                                   = 1024
```

AIX: SNA Server

```
min_ru_size                                    = 1024
class_of_service_name                          = "#CONNECT"
comments                                       = ""
```

HP-UX: SNAplusLink

A HP 9000 computer (with HP-UX 9.0 or higher) can communicate with an SNA mainframe. The HP-UX system is integrated in the host network through the configuration of the communications subsystem.

For details on the configuration of SNAplusLink, refer to the following topics:

Software Requirements [Seite 148]

Configuration Example [Seite 150]

Starting SNAplus [Seite 155]

Further HP Documentation [Seite 156]

For a complete and consistent example configuration, see the following topic:
Connecting R/3 and R/2 on an IBM Host [Seite 222]

Software Requirements

You need the following products:

- SNAplusLink
- *SNAplus API*
- STREAMS/UX

These products reproduce an SNA node type 2.1.

Communications subsystem and library

Product	S700	S800	Version	Path
SNAP+LINK	J2226A	J2220A	A.09.01.002	/etc/conf/libsixl.a
PU2.1 patch	PHNE_3749	PHNE_3750	A.09.01.003	/etc/conf/libsix1.a
SNAP+API	J2229A	J2223A	A.09.01.000	/usr/lib/libsna.a
APPC patch	PHNE 3608	PHNE_3609	A.09.01.004	/usr/lib/libsna.a
STREAMS/UX	J2232A	J2237A	A.09.00	/hp-ux
DLPI patch	PHNE_3953	PHNE_3954		/hp-ux

The HP-UX command *what* gives you details of the file version, as the following example illustrates:

```
/usr/bin/what  /usr/lib/libsna.a
```

The *PU2.1 patch* and *APPC patch* components will be included in Release 3 of SNAplus. Delivery of Release 3 is scheduled for March 1994.

The *DLPI patch* component to STREAMS/UX will be included in the next release of STREAMS/UX. This release will be available at the same time as HP-UX 10.0.

The following network connections are supported:

- SDLC
- X.25
- Token Ring

An SDLC interface is included as an option in the SNAplusLink product.

If you are implementing Token Ring or X.25 (QLLC), you must order the following products separately.

HP products for Token Ring and X.25

Product	S700	S800	Version	Path
Token Ring	J2165A	J2166A	A.09.00	/etc/conf/libx25.a
X.25	36959A	36960A	A.09.00	/etc/conf/libtoken.a

If you are using the Token Ring interface in an SAP environment, you must change the *Link Level (Station) Address* of the interface card. To do this, *HP* provides a tool called *changeaddr*.

Configuration Example

Carry out the configuration using the program *snapconfig*. This program offers you a pull-down menu. Proceed from left to right and from top to bottom. If you need help, press the F1 key.

You must configure the following parameters:

- Link parameters
- Connection parameters
- Node parameters
- APPC mode parameters
- Remote LU parameters
- Local LU parameters

You will find detailed information on configuration in the following guides:

- HP-UX SNAplusLink Administrator's Guide
- HP-UX SNAplusAPI Adminstrator's Guide

You will find the required parameters in the following topics, together with examples of values for connecting a HP 9000 to an IBM mainframe (with the R/2 System) via a Token Ring and an SDLC connection.

Link Parameters

This topic describes the configuration of the link parameters.

You will find the corresponding remote configuration parameters, together with further details on link configuration, in the following guide: *HP-UX SNAplusLink Administrator's Guide*

```
*************************************************************
*                     SDLC Link Record                      *
*************************************************************
  SDLC link name................. SDLC1
  Description.................... [SAP SDLC Link]
  Device name.................... [sna_SDLC]
  Port number.................... 0
  Line type...................... Leased
  Constant carrier?.............. No
*************************************************************
*                     Token Ring Link Record                *      *
*
*************************************************************
  Token Ring link name........... TR1
  Description.................... [SNA+ TR Link]
  Device name.................... [sna_TR]
  Port number.................... 0
```

Connection parameters

This topic describes the configuration of the connection parameters.

You will find the corresponding remote configuration parameters, together with further details on connection configuration, in the following guide: *HP-UX SNAplusLink Administrator's Guide*

```
*************************************************************
*                Connection Record                          *
*************************************************************
    Link type................  SDLC
    Connection name..........  MUNICH
    Description..............  [To SAP R/2 MF in Munich]
    Remote end is............  Host
    Activation type..........  On demand
    XID type.................  Format 0
1)  Node ID to send..........  [017] [FFFFF]
    Node ID to receive.......  [] []
2)  Control point name.......  [PUSTG0]
    Available links..........  1
3)    Link #1................  SDLC1
    Data encoding............  NRZ
    Duplex...................  Half
    Data rate select.........  High
    Select standby...........  Yes
    Dial data................  []
    Poll address.............  C1
    Connection timeout.......  15 sec


*************************************************************
*                Connection Record                          *
*************************************************************
    Link type................  Token Ring
    Connection name..........  TR
    Description..............  [TR Connection]
    Remote end is............  Host
    Activation type..........  On demand
1)  Node ID to send..........  [017] [FFFFF]
    Node ID to receive.......  [] []
2)  Control point name.......  [PUSTG0]
    Available links..........  1
     Link #1................  TRLINK
4)  Remote address...........  400072A3FFFF
    SAP address..............  4
    Retry limit..............  10
    Receive ack threshold....  2
    Unacknowledged send limit.  1
    Maximum BTU length.......  1929
```

Comments:

1. Should match *IDBLK=nnn* and *IDNUM=nnnnn* in VTAM
2. Should match *puname* in NCP or VTAM
3. Leased SDLC connections can use only one link.
4. *Link Level (Station) Address* of remote node (hex)

Node parameters

This topic describes the configuration of the node parameters.

You will find more details on configuring a *local node* in the following document: *HP-UX SNAplusLink Administrator's Guide*

Configuration Example

```
*************************************************************
*                Local Node Record                          *
*************************************************************
    Local node name............ CUANODE1
    Description................ [CUA R/2 Gateway Node]
5)  Network name............... [DESAPW00]
    Number of connections...... 2
    Connection #1.............. MUNICH
    Connection #2.............. LOCAL
```

APPC mode parameters

This topic describes the configuration of the APPC mode parameters.

You will find the corresponding remote configuration parameters, together with further details on APPC mode configuration, in the following guide: *HP-UX SNAplusLink Administrator's Guide*

```
*************************************************************
*               APPC Mode Data Record                       *
*************************************************************
6)  Mode name................  LU62TST1
    Mode ID..................  000
    Description..............  [LU62 Mode to CICS]
    Owning connection name...  [LOCAL]

    High priority mode?......  Yes
    Session limit............  1
    Auto activation limit....  0
    Min contention losers....  0
    Min contention winners...  0
    Send RU size.............  256 (min) to 1024 (max)
    Receive RU size..........  256 (min) to 1024 (max)
    Send pacing count........  4
```

Comments:

1. Should match the NETID start option in VTAM
2. `Should` correspond with the LOGMODE operands of the MODEENT macros in the logmode table.

Remote LU parameters

This topic describes the configuration of the remote LU parameter.

You will find the corresponding remote configuration parameter, together with further details on configuring the *APPC Remote LU,* in the following guide: *HP-UX SNAplusLink Administrator's Guide*

```
*************************************************************
*              APPC Remote LU Record                        *
*************************************************************
  LU alias......................  K50
  Description...................  [K50]
  Network ID....................  DESAPW00
  Remote LU name................  K50

  Prevalidation ability?........  No
  Parallel sessions?............  No
  Conversation-level security?...  No
  Uninterpreted LU name.........  K50

*************************************************************
*              APPC Remote LU Record                        *
*************************************************************
  LU alias......................  K43
  Description...................  [K43]
  Network ID....................  DESAPW00
  Remote LU name................  NN

  Prevalidation ability?........  No
  Parallel sessions?............  No
  Conversation-level security?...  No
  Uninterpreted LU name.........  NN
```

Local LU parameters

This topic describes the configuration of the local LU mode parameter.

You will find the corresponding remote configuration parameter, together with further details on configuring the *APPC Local LU*, in the following guide: *HP-UX SNAplusLink Administrator's Guide*

Configuration Example

```
*************************************************************
*                APPC Local LU Record                       *
*************************************************************
  Local LU name..................  LUSTG02
  Description....................  [LU 002 <-> K50]
  Owning local node name.........  CUANODE1
  Network ID.....................  [DESAPW00]
  Network name...................  LUSTG02

  Session limit..................  1
  Default LU?....................  Yes
  Locally usable?................  No
  LU number......................  2
  Conversation-level security?...  No
  Prevalidation ability?.........  No
  Number of remote LUs...........  1
  Remote LU #1:
    Remote LU name...............  K50
    Number of modes..............  1
    List of mode IDs.............  000

*************************************************************
*                            APPC Local LU Record           *
*************************************************************
  Local LU name..................  LUSTG04
  Description....................  [LU 004 <-> K43]
  Owning local node name.........  CUANODE1
  Network ID.....................  [DESAPW00]
  Network name...................  LUST004

  Session limit..................  1
  Default LU?....................  Yes
  Locally usable?................  No
  LU number......................  4
  Conversation-level security?...  No
  Prevalidation ability?.........  No
  Number of remote LUs...........  1
  Remote LU #1:
    Remote LU name...............  K43
    Number of modes..............  1
    List of mode IDs.............  000
```

Starting SNAplus

Call the *snapmanage* program to start the SNAplus services.

In the menu bar select *Manage* → Services. The *Link* and *Node* are started.

Further HP Documentation

You need the following guides to install and configure the individual components of the SNA communications subsystem.

- HP-UX SNAplus Installation Guide (HP order number: J2220-61021)
- *HP-UX SNAplusLink Administrator's Guide* (HP order number: J2220-61023)
- HP-UX SNAplusAPI Adminstrator's Guide (HP order number: J2223-61008)
- HP SNA Products Remote System Configuration Guide (HP order number: J2220-61025)
- HP-UX SNAplus Diagnostics Guide (HP order number: J2220-61022)
- STREAMS/UX for the HP 9000 Reference Manual (HP order number: J2237-60001)

OS/2: Communications Manager

An OS/2 computer can communicate with an SNA mainframe. The OS/2 system is integrated in the host network through the configuration of the *IBM Communications Manager* (*CM/2)*.

You have to define two kinds of parameters for communication between the OS/2 computer with the SAP gateway and the R/2 mainframe:

- Network Parameters [Seite 158]
- Network Parameters [Seite 159]

You must configure the network and communications parameters in the communications subsystem.

For more details on the configuration of the *Communications Manager*, refer to the following topics:

Configuration of CM/2 [Seite 160]

The CM/2 Trace Function [Seite 169]

For references to further documentation, see Further Documentation [Seite 170].

For a complete and consistent example configuration, see the following topic:

Connecting R/3 and R/2 on an IBM Host [Seite 222]

Network Parameters

The local network parameters are dependent on the type of connection in use.

For Ethernet and Token Ring connections, you have to define two parameters each time:

- Target address of the CUA server (destination address)

  This is normally the address of the IBM control unit.
- Local address of the OS/2 workstation, on which the SAP gateway software is running (adapter address)

For SDLC connections, you only have to configure the line address.

For X.25 connections, you have to define several parameters:

- local and remote addresses
- logical channels (SVC, PVC)

You must configure the communications parameters in the *Communications Manager*. This configuration is a requirement for communication between the SAP Gateway and the R/2 host.

Network Parameters for *Communications Manager*

Type of connection	Parameter description
Ethernet	Adapter Address Destination Address
SDLC	Local Station Address
Token Ring	(Adapter) Address Destination Address
X.25	Local DTE Address Remote DTE Address Switched Virtual Circuit or: Permanent Virtual Circuit

Communications Parameters

The communications parameters are defined in communications profiles of the communications subsystems. Part of the set of parameters can be addressed inside the communications subsystem via the replacement term (alias). Reference to it is also made in the side info table.

You must configure the communications parameters in the *Communications Manager*. This configuration is a requirement for communication between the SAP Gateway and the R/2 host.

Communications parameters for *Communications Manager*

Profile	Profile name (Alias)	Comment
Logical unit of the local program	*Logical Unit Profile*	
Logical unit of the partnerprogram	*Partner Logical Unit Profile*	Caution: Assignment to DLC type This assignment is dependent on connection
Data transfer control	*Data Link Control (DLC) Profile*	
Transfer	*Transmission Service Mode Profile*	
Initial session limit	*Initial Session Limit Profile*	
Remotely attachable local transaction programs	*Transaction Program Profile*	Only to be defined for the programs of an SAP component, which can be started from the host Example: ABAP/4 interface of the business graphics

Configuration of CM/2

For connection of R/2 Workstation Software under OS/2, you have to configure the Communications Manager for LU6.2 connections. Communications Manager CM/2 Version 1.0/1.1/1.11 can be used both under the OS/2 2.x operating system and OS/2 Warp 3.0.

The configuration example below is for communication with an IBM-3174 control unit as the LAN gateway.

This configuration example is available in the following subdirectory (after installation of the R/2 Workstation Software):
/SAP_WS/COMMSUB/TR_CM2.* (4 files in total)

In the same subdirectory, you will also find a configuration example for an SDLC connection to the host. It is under the name SDLC_CM2.* (4 files in total).

You configure other communication paths (Ethernet, X.25,..) in the same way as the model profiles. The IBM documentation may offer help on special adjustments.

General parameter definitions (on the host side; VTAM, CICS, IMS) are identical to the example specifications in the section MVS/VSE Host Systems [Seite 118]. These parameter definitions are shown in the configuration data as follows: [**Parameter value**].

To configure the workstation-host connection correctly, you have to perform the following actions:

1. Select the symbol ***"CM/2"*** on the PM interface
2. Select the symbol ***"Communications Manager-Setup"***
3. Choose the option ***"SETUP"***
4. Select the profile to be edited (e.g. TR_CM2)

   (The configuration example can be found in the COMMSUB subdirectory. It must first be copied to the /CMLIB directory.))
5. You will be prompted whether the CM/2 configuration is used on the workstation; Respond accordingly
6. The following parameter setting is required only up to Version 1.040 of the R/2 Workstation Software:
   - Select ***"OPTIONS"*** in the menu bar of the CM/2 Configuration Definition
   - Select the function ***CHANGE WORKSTATION INFORMATION***
   - Enter the file name ***ACSGSAP.DAT*** in the ***field "ASCII/EBCDIC translation table file name"***, and confirm
   - Do not make any changes under the option ***"DEFINITION SELECTION"***. This selection screen does NOT appear with CM/2 Version 1.0.
7. Under ***"WORKSTATION CONNECTION TYPE",*** select the relevant connection type ***"TOKEN-RING OR OTHER LAN TYPES"*** is the connection type defined for the SAP example TR_CM2.

   It is a good idea if you first activate an IBM 3270 terminal emulation session (LU2). You can then be certain that you have a physical (and logical) connection with the

host (display of terminal emulation screen). Now you can begin to set up an LU6.2 session. If you are not implementing 3270 terminal emulation, you can skip point 8.

8. Under ***"FEATURE OR APPLICATION"***, select ***"3270-Emulation"*** and activate with the option ***"Configure"***

```
                                                  Comments
3270 Emulation
     - Destination address: [40003174FFFF]  Address 3174 Gateway
                                            (e.g. IBM control
unit)
     - Number of terminal:  [1 ]            Number of 3270
terminal-
                                            emulation sessions
```

– Activate the option ***"ADVANCED..."***

– From the ***"Communications Manager Profile List"***, select the function ***"REQUIRED 3270-EMULATION"*** and activate with the option ***"CONFIGURE"***

– In the 3270 Emulation Window, position the mouse pointer on ***"HOST"*** and double-click.

Corresponding parameter update:

```
- Presentation Space  : 25x80   3278/79 Model 2
- LU local/NAU address: [03]    VTAM Address (LOGADDR)
- Session ID          : [A ]
- Alarm               : Screen Update [OFF]      no beep
```

SAP CONNECTION USER:
If you intend to work with the product SAP Connection for OS/2, set an IBM 3278/79 Mod 2. Communication is implemented with an HLLAPI interface of the Communication Manager. Screen Update OFF stops the output of beeps when changing screens at the terminal.

– Go back as far as the ***"Communications Manager Profile List"*** window. Continue with point 10.

9. Under ***"FEATURE OR APPLICATION"***, select ***"APPC APIs"*** and activate with the option ***"Configure"***. Skip the ***"APPC APIs***" window by activating the option ***"ADVANCED"***.

10. From *"Communications Manager Profile List"*, select the function ***"DLC-TOKEN-RING OR OTHER LAN TYPES"*** and activate with the option ***"CONFIGURE"***.

– Select Data Link Control (DLC)

```
    - Adapter                :  [ 1]    Adapter number
- Maximum Link Stations :  [ 4]    or higher
 - percent incoming calls:  [ 0]    no reservation
- Maximum I-field size  : [1920]   Adapter type dependent
     (to be adjusted according to the RU size in MODE, as the
headers are to be included for this parameter.)

   - Window count                      Parameter xxx in VTAM
```

```
Send window count       :  [2]

Receive window count    :  [1]
```

– Select SNA local node characteristics

```
- Network ID          : [SNANETID]    SNA network ID

- Local node name     : [PTRJA0    ]  VTAM PU name
(PTRJA0=PUNAME)

- End Node - no Network Node [x]           LEN, no APPN !

      - Local node ID      : [00000]      IDNUM in VTAM

Continue by activating the OPTIONS field.

      - Local node Alias            : [PUALIAS  ]   PU Alias
Name

      - Activate Attach Mgr        [x]
```

– Return to the Communications Manager Profile List.

– Select **SNA connections**

```
      Partner Typ - to host

             - Link name [LINK0001]

Back to window adapter list with Create or Change

Select adapter type/number (for example "Token-ring or other
LAN types") and activate with the option CONTINUE...

- Partner network ID          : [SNANETID]     SNA Network
ID

- Partner node name           : [CPNAME  ]     VTAM CP name
                                             (not checked;
                                              entry field is
however
                                              "REQUIRED")

- LAN destination address: [40003174FFFF]   Address 3174
Gateway
                                             (e.g. IBM control
unit)

Continue by activating the option DEFINE PARTNER LUs...

      - Define Partner LUs

          Network ID       : [SNANETID]     SNA Network ID

          LU name          : [CICSPL   ]    CICS ACB name
or
                                            IMS LU6.1 Adapter
                           [APPCBRDG]      (CICSPL=ACBNAME)

          Alias            : [MYCICS  ]     ==> Entry in
table SIDEINFO

          Define partner LU functionality
```

```
                                [DEPENDENT] or [INDEPENDENT]

                                 For Independent, the parameter
                              "Uninterpreted name" has to be
defined;
                              Parameter is identical to Parameter
LU name

             Uninterpreted name  : [CICSPL  ]
   CICSPL=ACBNAME


                                      [ADD]
```

This is the only way that the partner LUs can be defined. If they are defined via ***"SNA features"***, then the Communications Manager functions incorrectly.

– Select SNA Features.

– Then select the **`Local LUs`** option in the in the **`SNA Feature List`** window under **`Features`**:

```
LU name              : [LU00000  ]     VTAM LU name

(LU00000=LUNAME1)
       - Alias                : [LU#01   ]       ==> SIDEINFO
       - NAU address

            (x) Dependend LU     : [01]            VTAM
address (LOGADDR)
       - LU name              : [LU00001  ]     VTAM LU name

(LU00001=LUNAME2)
       - Alias                : [LU#02   ]       ==> SIDEINFO
       - NAU address

            (x) Dependend LU      : [02]            VTAM
Address (LOGADDR)
```

For Single Session Module, an LU address should be made available for each parallel connection.

– Return to the **SNA Feature List** and select **Partner LUs**.

  – **`SNANETID.ACBNAME  ALIAS`**

  – **`SNANETID.CICSPL  MYCICS`**

Display only is possible here. Partner LUs must not be defined from this position ---> Error !!!

The partner LUs are already defined within the connection and assigned to LINK0001.

Configuration of CM/2

– Select "Modes"

```
        - Mode name                    : [LU62SAP1]
   VTAM Mode

        - Class of service             : #CONNECT

        - Mode session limit           : [1]              Single
Session

        - Minimum con.winner    : [1]

        - Receive pacing        : [0]              0=no pacing

        - RU size

                    (x) Maximum RU size     : [256]
   SAP recommended value
```

For local connections, there are Pacing and RU Size values, which are also indicative for LU6.2 performance:

- RU size > 256
- Pacing > 1 or 0

– Select “Transaction Program Definitions”

Only has to be defined when the host is starting a program. For IMS customers, a program named **IMSASYNC** must always be entered here.

By copying the program GMUX_5x.EXE, you must create the program IMSASYNC.EXE from the GRAPHIC subdiretory.

```
  - Transaction Program (TP) name   : IMSASYNC
  - OS/2 program path and file name : x:\SAP\GW\IMSASYNC.EXE
                                       corresponding drive

  - Presentation type               : Presentation Manager
  - Operation type                  : Non-queued. Attach
Manager started
```

If you want to use the SAP configuration examples as a model, you must copy the files TR_CM2.* or SADLC_CM2 from the LW:\SAP\GW\COMMSUB directory to the directory of the Communications Manager (LW:/CMLIB).

The following files were copied:

```
\CMLIB\TR_CM2.CFG

\CMLIB\TR_CM2.CF2

\CMLIB\TR_CM2.SEC

\CMLIB\TR_CM2.NDF
```

or

```
\CMLIB\SDLC_CM2.CFG

\CMLIB\SDLC_CM2.CF2

\CMLIB\SDLC_CM2.SEC

\CMLIB\SDLC_CM2.NDF
```

The file TR_CM2.NDF (or SDLC_CM2.NDF) is a text file, in which the entries specified above (inter alia) can be found again. It is structured as follows:.

```
DEFINE_LOCAL_CP  FQ_CP_NAME(SNANETID.PTRJA0 )
      PTRJA0=PUNAME
      DESCRIPTION(Created on 01.02.95 at 16.30)
      CP_ALIAS(PUALIAS)
      NAU_ADDRESS(INDEPENDENT_LU)
      NODE_TYPE(EN)
      NODE_ID(X'00000')
      HOST_FP_SUPPORT(YES)
      HOST_FP_LINK_NAME(LINK0001);

DEFINE_LOGICAL_LINK  LINK_NAME(LINK0001)
      FQ_ADJACENT_CP_NAME(SNANETID.SSCPNAME)
      ADJACENT_NODE_TYPE(LEN)
      DLC_NAME(IBMTRNET)
      ADAPTER_NUMBER(0)
      DESTINATION_ADDRESS(X'40003174FFFF')
      CP_CP_SESSION_SUPPORT(NO)
      ACTIVATE_AT_STARTUP(YES)
      LIMITED_RESOURCE(USE_ADAPTER_DEFINITION)
      LINK_STATION_ROLE(USE_ADAPTER_DEFINITION)
      SOLICIT_SSCP_SESSION(YES)
      EFFECTIVE_CAPACITY(USE_ADAPTER_DEFINITION)
      COST_PER_CONNECT_TIME(USE_ADAPTER_DEFINITION)
      COST_PER_BYTE(USE_ADAPTER_DEFINITION)
      SECURITY(USE_ADAPTER_DEFINITION)
      PROPAGATION_DELAY(USE_ADAPTER_DEFINITION)
      USER_DEFINED_1(USE_ADAPTER_DEFINITION)
      USER_DEFINED_2(USE_ADAPTER_DEFINITION)
      USER_DEFINED_3(USE_ADAPTER_DEFINITION);

DEFINE_LOCAL_LU  LU_NAME(LU00000)
      LU00000=LUNAME1
                  DESCRIPTION(Local LU #1 for LU6.2 sessions)
                  LU_ALIAS(LU#01 )
                  NAU_ADDRESS(1);

DEFINE_LOCAL_LU  LU_NAME(LU00001)
      LU00001=LUNAME2
                  DESCRIPTION(Local LU #3 for LU6.2 sessions)
                  LU_ALIAS(LU#02 )
                  NAU_ADDRESS(2);

DEFINE_PARTNER_LU  FQ_PARTNER_LU_NAME(SNANETID.CICSPL )
      CICSPL=ACBNAME
                    DESCRIPTION(Partner LU is CICS running SAP R/2
```

Configuration of CM/2

```
System)
                        PARTNER_LU_ALIAS(MYCICS)
                        PARTNER_LU_UNINTERPRETED_NAME(CICSPL )
      CICSPL=ACBNAME
                        MAX_MC_LL_SEND_SIZE(32767)
                        CONV_SECURITY_VERIFICATION(NO)
                        PARALLEL_SESSION_SUPPORT(NO);
```

Entry for LU6.2 connection with IMS. To be able to implement LU6.2, an LU6.1 Adapter is used here. You must enter the name of the LU6.1 Adapter for the entry **ACBNAME** of CICS when defining the partner LU. The standard definition of this name is as **APPCBRDG.**

```
DEFINE_PARTNER_LU  FQ_PARTNER_LU_NAME(SNANETID.APPCBRDG)
      DESCRIPTION(Partner LU is IMS LU6.1 Adapter for LU6.2
Applications)
      PARTNER_LU_ALIAS(APPCBRDG)
      PARTNER_LU_UNINTERPRETED_NAME(APPCBRDG)
      MAX_MC_LL_SEND_SIZE(32767)
      CONV_SECURITY_VERIFICATION(NO)
      PARALLEL_SESSION_SUPPORT(NO);

DEFINE_PARTNER_LU_LOCATION  FQ_PARTNER_LU_NAME(SNANETID.CICSPL)

      CICSPL=ACBNAME
      DESCRIPTION(Partner LU is CICS running SAP R/2 System)
      WILDCARD_ENTRY(NO)
       FQ_OWNING_CP_NAME(SNANETID.CPNAME)
      LOCAL_NODE_NN_SERVER(NO);

DEFINE_PARTNER_LU_LOCATION  FQ_PARTNER_LU_NAME(SNANETID.APPCBRDG)
       DESCRIPTION(Partner LU is IMS LU6.1 Adapter for LU6.2
Applications)
      WILDCARD_ENTRY(NO)
      FQ_OWNING_CP_NAME(SNANETID.CPNAME)
      LOCAL_NODE_NN_SERVER(NO);

DEFINE_MODE  MODE_NAME(LU62SAP1)
               DESCRIPTION(Logmode used for LU6.2 single session
support)
               COS_NAME(#CONNECT)
               DEFAULT_RU_SIZE(YES)
               RECEIVE_PACING_WINDOW(0)
               MAX_NEGOTIABLE_SESSION_LIMIT(32767)
               PLU_MODE_SESSION_LIMIT(1)
               MIN_CONWINNERS_SOURCE(1);

DEFINE_DEFAULTS  IMPLICIT_INBOUND_PLU_SUPPORT(YES)
      DESCRIPTION(Created on 01.02.95 at 16.30)
      DEFAULT_MODE_NAME(BLANK)
      MAX_MC_LL_SEND_SIZE(32767)
      DIRECTORY_FOR_INBOUND_ATTACHES(*)
```

```
      DEFAULT_TP_OPERATION(NONQUEUED_AM_STARTED)
      DEFAULT_TP_PROGRAM_TYPE(BACKGROUND)
      DEFAULT_TP_CONV_SECURITY_RQD(NO)
      MAX_HELD_ALERTS(10);
```

An entry for transaction programs is only necessary if a host is activating a program on the workstation. This is the case, for example, with direct program-to-program communication. You only define the program **IMSASYNC.EXE** if you are using the LU6.1 Adapter.

```
DEFINE_TP  TP_NAME(IMSASYNC)
      DESCRIPTION(SAP's Graphics Multiplexer for IMS Requests)
      FILESPEC(D:\SAP_WS\GRAPHIC\IMSASYNC.EXE)
      CONVERSATION_TYPE(EITHER)
      CONV_SECURITY_RQD(NO)
      SYNC_LEVEL(EITHER)
      TP_OPERATION(QUEUED_AM_STARTED)
      PROGRAM_TYPE(PRESENTATION_MANAGER)
      INCOMING_ALLOCATE_QUEUE_DEPTH(255)
      INCOMING_ALLOCATE_TIMEOUT(INFINITE)
RECEIVE_ALLOCATE_TIMEOUT(INFINITE);

START_ATTACH_MANAGER;
```

The configuration file SDLC_CM2.NDF has the same structure; The only additional parameters for definition are some that are specific to dedicated or switched lines.

Explanation:

All ”name or value” parameters refer to other examples in this guide.

You can assign any value to the parameter **MYCICS**; It only refers to the SIDEINFO table. For a better understanding, you should enter the ACB name here (that is, the same value as for parameter ACBNAME).

When using a "dependent" LU, the parameter "**PARTNER_LU_UNINTERPRETED_NAME**" must be the same as the **ACBNAME** for the partner definition.

If you want to define additional LUs, PLUs etc, this can also be done by copying the corresponding block in the.NDF file and then overwriting the old data with the current parameters. If the.NDF file was changed with an editor, you must then execute the program CMVERIFY.EXE in an OS/2 window. You start the program with the CMVERIFY command and the specification of the file to be checked (without extension).

Configuration File Upgrade

It is not the adapter address of the file to be updated that is copied, but the adapter address of the standard configuration file for starting the Communications Manager.

Table SIDEINFO for Configuration Example TR_CM2

You can assign any value to the **DEST** parameter, but it must match the SYSTEMID (or DESTINATION) entry in the CUA Interface called.

```
*-------------------
* SAP R/2 K50
*------------------
```

Configuration of CM/2

```
DEST=K50                - Destination
PROTOCOL=C
LOCAL_LU=LU#01          - local LU
LU=MYCICS               - Partner LU
TP=X1SA                 - Start transaction on the host
MODE_NAME=LU62SAP1      - LogMode
CPIC_TRACE=3            - Environment variable (example)
KEEP_SESSION=1          -Environment variable (example)
```

The CM/2 Trace Function

The Communications Manager CM/2 offers a convenient Trace Function for better error analysis.

The Trace is also an important troubleshooting utility for R/2 Workstation Software problems when analyzing the flow of data between the host and the workstation.

The Line Trace is a very good method of analyzing SNA data flows between host and workstation. Below is a description of how to receive a Trace Recording.

It can then be used for error analysis (by the Hotline Service in Walldorf, for example).

1. Start the Trace

   You start the SNA CM/2 Trace by opening (double-clicking) the Communications Manager CM/2 folder on the PM interface of the OS/2 operating system. When opened, a series of symbols are displayed for the various CM/2 functions. Activate the symbol "*Problem Determination Aids - Trace"* by double-clicking. A selection window now appears for the Trace Service.

2. Define Trace Parameters

   In the field "*Trace selection"*, set the following parameters:

APIs	===>	APPC
DLCs	===>	The transmission medium for the host, e.g. IBMTRNET for Token-Ring or SDLC for a dedicated/switched line
Events	===>	Any value (no definition is standard here)

3. Start/stop Trace Recording

   You start and stop a Trace Process with the pushbuttons.

4. Save the Trace Recording, when created

   You likewise save the Trace (when created) with a pushbutton. First, however, you have to stop the Trace. It is then possible for you to enter a file name with path description in the field "*Trace filename*". The Trace is then stored in this path/directory. If you only specify the file name, the standard directory for storing the file is the installation directory of the Communications Manager (directory /CMLIB).

   When the Trace is saved, it can be analyzed with an editor.

   You can activate trace creation before starting the Communications Manager. In this way, you can record a trace of a complete connection setup between SNA host and workstation.

Further Documentation

You will find detailed information on configuring the profile in the relevant product documentation.

Error messages in connection with program-to-program communication are explained in the following guides:

- IBM System Application Architecture Common Programming Interface Communications Reference
- IBM OS/2 Programming Guide and Reference
- IBM Problem Determination Guide

The README.DOC file, which comes with the R/2 Workstation Software, contains information on the most recent changes in configuration, as well as the communications sofware currently supported. The manual does not always contain the very latest changes, which were not available at the time of printing.

SINIX: Transit

A SINIX computer (RM400, RM600, MX300i) can communicate with an SNA mainframe.

The SINIX system is integrated in the host network through the configuration of the Transit communications subsystem.

The Transit software reproduces an SNA node type 2.0 or 2.1.

For details on the configuration of Transit, refer to the following topics:

Software Requirements [Seite 172]

Configuring CCP [Seite 173]

Configuring CMX (TNS Entries) [Seite 174]

Generating Transit [Seite 176]

Corresponding Parameters [Seite 178]

For a complete and consistent example configuration, see the following topic:
Connecting R/3 and R/2 on an IBM Host [Seite 222]

Software Requirements

You require the following components of the *Transit* communications subsystem:

- Transit CPIC Version 3.1
- Transit Server Version 3.1

  For SDLC connections:

  – Transit Access 1.0

  For Token Ring connections:

  – CMX 3.0C

  – CCP-TR 1.0

Configuring CCP

The communication control program CCP implements the various transfer protocols.

The following protocols are supported for SDLC and Token Ring:

CCP	STA1 for SDLC connection
CCP	TR for LAN with Token Ring

You will find a detailed description of the configuration of CCPs in the relevant CCP guides.

The following examples illustrate the configuration for SDLC and Token Ring.

Configuring CCP for SDLC

For an SDLC connection, configure the CCP using the following example:

```
XLTNG       LIDENT = 00000000,
            MODTAKT = JA,
            NRZI = NEIN,
            PRTIMER = 3000,
            UEGSW = 64000,
            UEKONF = PZP,
            UEUNB = SEC/DX,
            UEWEG = FE-STAND/4DR,
            WDHZAEL = 10,
            X21DEF = DBP,
            MAXIFL = 265
XSTAT       STATNAM = SDLC,
            STATTYP = PU2.0,
            LINKADR = C1,
            STIDENT = 00000000XEND
```

Configuring CCP for Token Ring

For a Token Ring connection, configure the CCP using the following example:

```
XGLOB
          ADAPADD = 0          ; Value = 0: universal adm.
          EXCHIDOWN = 00000000
          SSAP1 = 04
XPROF1
          T1 = 5,  ; Value < 6: Factor 200ms, otherwise: 600ms
          T2 = 3,  ; Value < 6: Factor  40ms, otherwise:  80ms
          N1 = 1033,
          N2 = 8,
          N3 = 1,
          TW = 2,
          STATTYP 04
          EXCHIDREM = D8D5E3A3     # Here enter XID from host
XEND
```

Configuring CMX (TNS Entries)

For SDLC and Token Ring, you must configure the CMX via TNS entries.

You will find a detailed description of the CMX configuration in the TNSADMIN section of the CMX guide.

The following examples illustrate the configuration for SDLC and Token Ring.

TNS Entries for SDLC

For an SDLC connection take, as an example, the following TNS entries:

```
(1): PROPERTIES OF THE TS APPLICATION
/.../.../.../.../local_tsap

      TRANSPORT ADDRESS:
      TRANSPORT SYSTEM:       CMX-LOCAL
         T-selector:        A NAME
                          X D5C1D4C540404040
        LOCAL NAME:
      T-selector for CCP-STA1-SDLC: T SDLC
                                    X E2C4D3C340404040
        T-selector for CMX-LOCAL: A NAME
                                    X D5C1D4C540404040
(2): PROPERTIES OF THE TS APPLICATION
/.../.../.../.../remote_tsap

      TRANSPORT ADDRESS:
      TRANSPORT SYSTEM:       CCP-STA1-SDLC
         Init. Domain Id.:  D 2
```

TNS Entries for Token Ring

For a Token Ring connection take, as an example, the following TNS entries:

```
(1): PROPERTIES OF THE TS APPLICATION
/.../.../.../.../local_tsap

      TRANSPORT ADDRESS:
      TRANSPORT SYSTEM:       CMX-LOCAL
         T-selector:        A $TRANST2
                          X 245452414E535432
        LOCAL NAME:
      T-selector for CCP-LAN2/TR: A $TRANST2
                                    X 245452414E535432
        T-selector for CMX-LOCAL: A $TRANST2
                                    X 245452414E535432
(2): PROPERTIES OF THE TS APPLICATION
/.../.../.../.../remote_tsap

      TRANSPORT ADDRESS:
      TRANSPORT SYSTEM:       CCP-LAN2/TR
         CC address:        X 41004523FFFF
         T-selector:        A S04D0
                          X 533034443034
      CC-LIST L[1-6]:       L 2
```

Generating Transit

The following example shows a Transit generation.

```
*************************************************************
*  Configuration of a Link (Example name: HOSTLINK)
*************************************************************
XLINK     HOSTLINK,
                ACT             = AUTO,
                TYP             = SDLC,
                NAME-PART[5]    = local_tsap
*************************************************************
*  Configuration of the Partner Station (Example name: HOSTPU)
*************************************************************
XPU       HOSTPU,
                TYP             = HOST,
                CONNECT         = AUTO,
                DISCNT          = MAN,
                LINK            = HOSTLINK,
                NAME-PART[5]    = remote_tsap
*************************************************************
*  Configuration of the local LUs
*************************************************************
XLU       LUSTO01,
                TYP             = 6,
                LOCADDR         = 2,
                SESS-CTR        = DEP,
                NETNAME         = DESAPW00,
                PAIR            = K50SNI LU62TST1
XLU       LUSTO02,
                TYP             = 6,
                LOCADDR         = 3,
                SESS-CTR        = DEP,
                NETNAME         = DESAPW00,
                PAIR            = K50SNI LU62TST1
XLU       LUSTO03,
                TYP             = 6,
                LOCADDR         = 4,
                SESS-CTR        = DEP,
                NETNAME         = DESAPW00,
                PAIR            = K50SNI LU62TST1

**************************************************************
*  Configuration of the remote LUs
**************************************************************
XLU       K43SNI,
                NETNAME         = DESAPW00.NN,
                PU   = HOSTPU
XLU       K50SNI,
                NETNAME         = DESAPW00.K50,
                PU   = HOSTPU
**************************************************************
*  Configuration of a Logmode (as agreed with the remote LU)
**************************************************************
XMODE     K43SNI,
               SESS-MAX         = 1
               SESS-LOS         = 0
               SESS-WIN         = 1
               SESS-AUTO        = 1
               PAC-SEND         = 0
               PAC-RCV          = 0
```

```
*****************************************************************
*  Configuration of a SINIX Transaction program
*  (Connection set up to the host)
*  PROG:  - Name of a program
*       - Name of a Shell Script that for its part
*         starts a program.
*         Advantage of the shell script:
*         - Environment variables can be set.
*         - Current directory can be changed.
*****************************************************************
XTP   PROG,
              PATH   = /usr/sap/C11/SYS/exe/run/PROG,
              UIC    = c11adm,
              TYP    = USER,
              SECURE = NO

*****************************************************************
*  Configuration of the Side Info Parameters (Symbolic Destinations)
*****************************************************************
XSYMDEST K50,
              RLU     = K50SNI
              MODE    = LU62TST1
              TP      = X1SA
              TP-TYP  = USER
              SEC-TYP = NONE
XSYMDEST K43,
              RLU     = K43SNI
              MODE    = LU62TST1
              TP      = X1SA
              TP-TYP  = USER
              SEC-TYP = NONE
```

Corresponding Parameters

The following graphics illustrate the dependencies of various configuration parameters:

Sinix/Transit → CICS / R/2 [Seite 179]

Sinix/Transit → IMS / R/2 [Seite 180]

CICS / R/2 → Sinix/Transit [Seite 181]

Sinix/Transit → CICS / R/2 (via Token Ring) [Seite 182]

Sinix/Transit → CICS / R/2

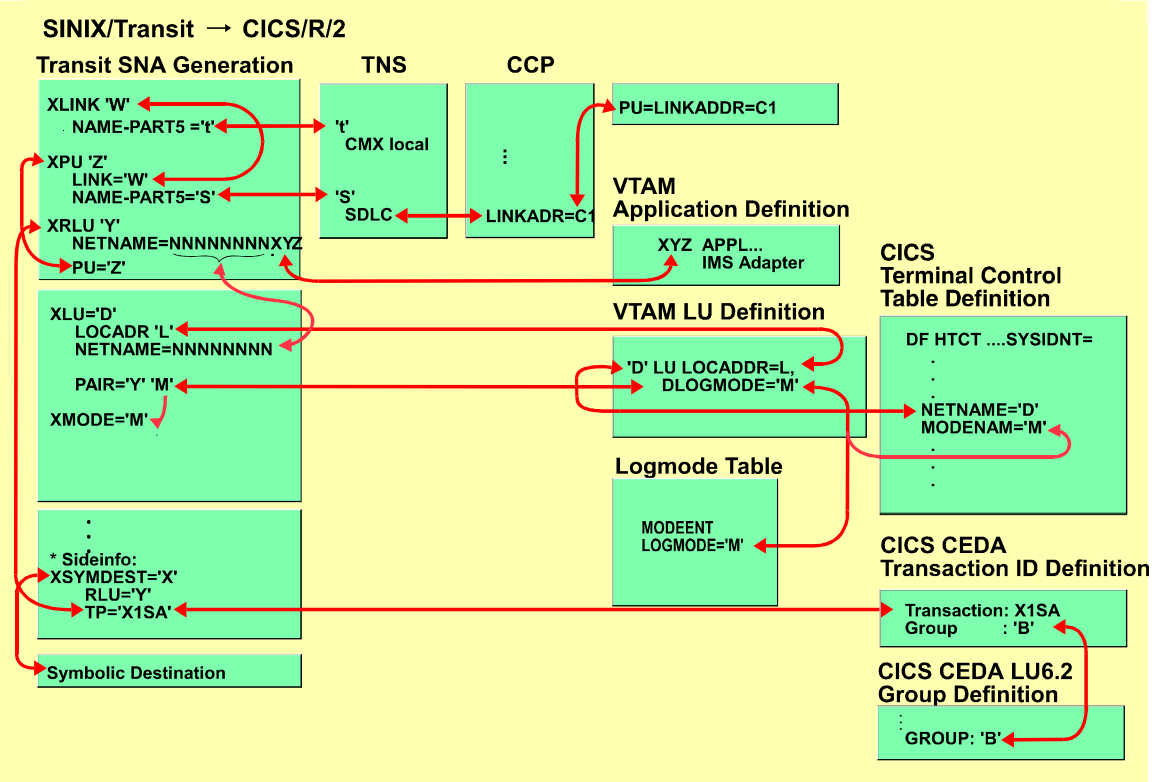

Sinix/Transit → IMS / R/2

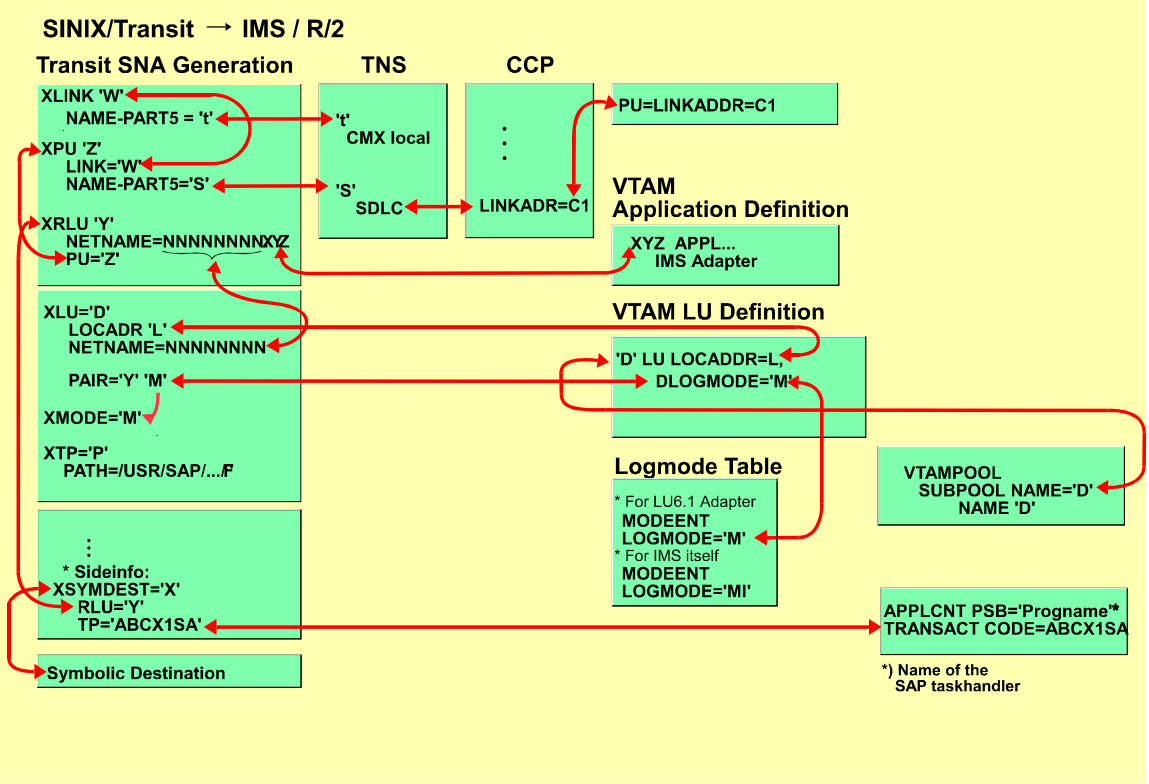

CICS / R/2 → SINIX / Transit

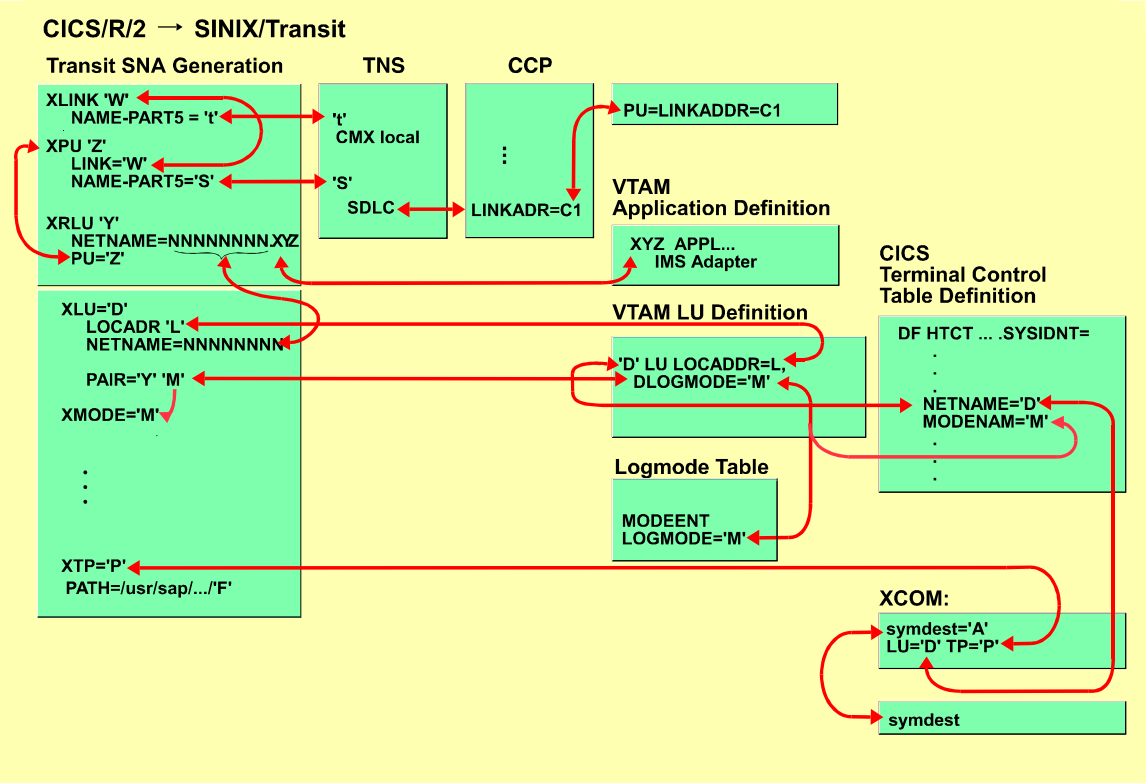

Sinix/Transit → CICS / R/2 (via Token Ring)

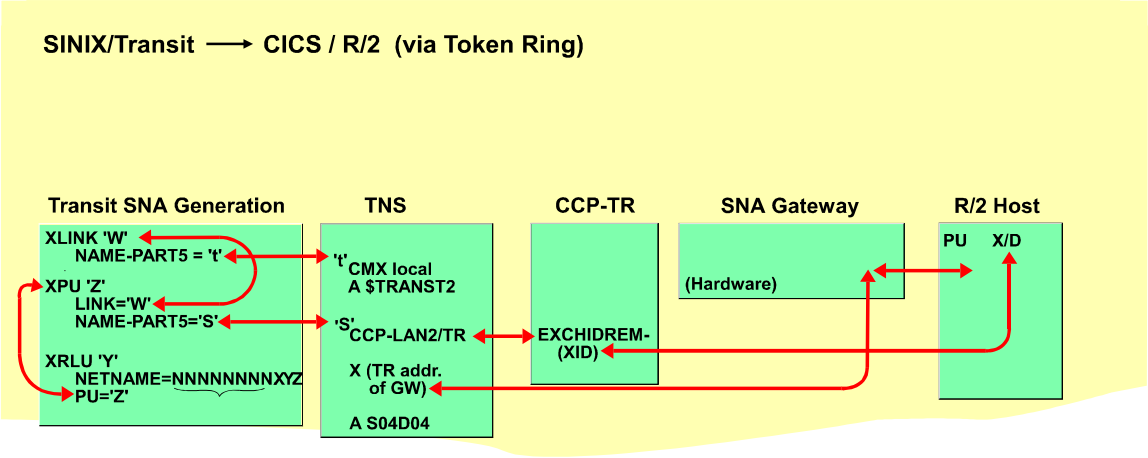

WindowsNT: SNA Server

A WindowsNT system (currently only on an Intel platform) can communicate with an SNA host via the *SNA Server*. The WindowsNT system is integrated in the host network through the configuration of the *SNA Server*.

Prerequisites

You require the following products:

- Windows NT 3.1 (or poss.3.5 as Advanced Server)
- Microsoft SNA Server V 2.1

This configuration forms a type 2.1 physical unit.

A maximum of one SNA Server can be operated for each WindowsNT domain. A second domain (Advanced Server) may have to be set up.

The SNA Server enables the following network connections:

- Token Ring
- SDLC
- Ethernet
- X.25

For an example configuration, see the following topic: Example Configuration [Seite 184]

Configuration Example

The configuration is performed with *SNA Server Admin*. This is also used for starting and stopping connections.

For a complete and consistent example configuration, see the following topic:
Connecting R/3 and R/2 on an IBM Host [Seite 222]

For a detailed description of *SNA Server Admin*, refer to the *Microsoft SNA SERVER Administration Guide*.

The configuration is explained below using step-by-step examples:

- **Server Properties:**

  Here you define the Network Name and Control Point Name (PU Name).

  z.B.: Network Name: DESAPW00

  Control Point Name: PTRMXB

- **Connection Properties:**

  Here you define the connection to the SNA network.

```
      Connection Name:              Token1
      Link Service:                 SnaDlc1
   802.2 Setup:
      Remote Network Adress:        400072A3FFFF
      Local Node Name:
         Local Node ID:       D9D   4E7C2
      Remote Node Name:
         Network Name:        DESAPW00
         Control Point Name:        SAP3
         Remote Node ID:
   Remote End:                Host System
   Activation:                On Server Startup
   Allowed Directions:  Outgoing-   Incoming Calls
```

Connections via an Independent LU 6.2

- **APPC (Local) LU Properties:**

```
   LU 6.2 Type:                      Independent
   LU Alias:                         LU#0
   Network Name:              LTRMXB0
   Enable Automatic Partnering:      yes
```

- **APPC Remote LU Properties:**

```
LU Alias:                        K50
Network Name:              DESAPW00
LU Name:                   K50
Uninterpreted LU Name:           K50
Supports parallel sessions:      yes
Enable Automatic Partnering:     yes
```

- **APPC Remote LU Properties:**

```
LU Alias:                        K43
Network Name:              DESAPW00
LU Name:                   NN
Uninterpreted LU Name:           NN
Supports parallel sessions:      yes
Enable Automatic Partnering:     yes
```

K50 and K43 are partner Lus of LU#0. LU#0 is listed twice in your ‘Partner’ directories; Log Modes **SNASVCMG** and **LU62SAP1** are used.

- **APPC Mode Properties:**

```
SNASVCMG
   Mode Name:                            SNASVCMG:
   Parallel Session Limit:               2
   Minimum Contention Winner Limit::     1
   Partner Min Contention Winner Limit:: 1
   Automatic Activation Limit:           1
   Enable Automatic Partnering:          No
   High Priority Mode:                   Yes
Pacing Send & Receive Count:       0
Max Send & Receive RU Size:        256
LU62TEST
   Mode Name:                            LU62SAP1:
   Parallel Session Limit:               8
   Minimum Contention Winner Limit::     4
   Partner Min Contention Winner Limit:: 4
   Automatic Activation Limit:           0
   Enable Automatic Partnering:          No
   High Priority Mode:                   Yes
Pacing Send & Receive Count:       8
```

Configuration Example

```
Max Send & Receive RU Size:        4096
```

The two modes are not a component of *Microsoft SNA Server Distribution*, and must be created. The definition of the **SNASVCMG** LOGMODE must be the same as the definition in the SNA network.

Set System Variable for Side Info File

You must define the name and directory of the valid side info file through the *side_info* system variable:

Example: `G:\usr\sap\C11\G44\data\sideinfo`

Proceed as follows:

1. Start the 'CONTROL.EXE' program using the 'Control Panel' icon in Windows NT.
2. Select the 'System' icon in the Control Panel window. You can set system and user environment variables in the window that you now see.

Alternatively you can set the *side_info* system variable by inserting the following key (REGEDT32).

```
Key Name:          SYSTEM\CurrentControlSet\Control\Session
Manager\Environment

Class Name:        <NO CLASS>

Last Write Time:    8-23-94 -  5:35p

Value 0

  Name:            ComSpec

  Type:            REG_EXPAND_SZ

  Data:            %SystemRoot%\system32\cmd.exe

.....

Value 3

  Name:            side_info

  Type:            REG_SZ

 Data: G:\usr\sap\C11\G44\data\sideinfo

......
```

Setting up Invokable TPs

Invokable TPs can be used for starting conversations from R/2 to other systems or to external programs. Invokable TPs are implemented as WinNT Services. Each invokable TP requires a Sideinfo entry that describes the target of the conversation that is to be held using the invokable TP.

The following entry contains variable names enclosed in angle brackets. These variable names must be replaced with the identifiers valid in your installation:

- <TP-NAME> is the name of the TP as defined in the R/2 table XCOM. (e.g. GWHOST)
- <SID> is the name of the gateway instance. (e.g. C21)

- <GW-MACHINE> is the NT and IP name of the computer on which the gateway is installed. The Windows NT and IP names have to be identical (e.g. nt_serv)
- <SIDADM> is to be replaced by the account of the gateway administrator.(e.g. c21adm) The account was created during the installation of the gateway.

The invokable TP itself is a copy of the following program:
\\<GW-MACHINE>\sapmnt\<SID>\SYS\exe\run\gwhost.exe

The invokable TP is created using the following command:

```
copy gwhost.exe <TP-NAME>.exe
```

Take care to distinguish between upper and lower case in <TP-NAME>.

Do not forget to repeat this step if you install a new version of gwhost.exe.

The NTSCMGR.EXE utility program (in the same path as the SAP programs) helps you set up the service. It creates a service entry that allows a TP to be started. You call the NTSCMGR.EXE utility as follows:

```
NTSCMGR install <TP-NAME> -m <GW-MACHINE>
-b \\<GW-MACHINE>\sapmnt\<SID>\SYS\exe\run\sapntstarttp.exe
-p \\<GW-MACHINE>\sapmnt\<SID>\SYS\exe\run\<TP-NAME>.exe
```

Caution: The command illustrated in the above example has to be entered in a single line.

You now have to change the start mode of the service in a way that causes the <TP-NAME>.exe program to be started under the user ID of the gateway administrator <SIDADM>: To do this Start the ‘CONTROL.EXE’ program using the ‘Control Panel’ icon in Windows NT.

Select the *Services* icon in the Control Panel window. The <TP-NAME> service is selected, in the ‘Startup’ menu the gateway administrator account is selected. If you now enter the gateway administrator’s password, you can then start the <TP-NAME> service.

As a result, the Registry database will now contain the following entry:

```
Key Name: SYSTEM\CurrentControlSet\Services\<TP-NAME>

Name:       DependOnGroup
Type:       REG_MULTI_SZ
Data:

Name:       DependOnService
Type:       REG_MULTI_SZ
Data:             LanmanWorkstation LanmanServer

Name:       DisplayName
Type:       REG_SZ
Data:             <TP-NAME>

Name:       ErrorControl
Type:       REG_DWORD
Data:       0x1

Name:       ImagePath
Type:       REG_EXPAND_SZ
Data:       \\<GW-MACHINE>\sapmnt\<SID>\SYS\exe\run\sapntstarttp.exe
```

Configuration Example

```
            \\<GW-MACHINE>\sapmnt\<SID>\SYS\exe\run\<TP-NAME>.exe

Name:         ObjectName
Type:         REG_SZ
Data:         <SIDADM>

Name:         Start
Type:         REG_DWORD
Data:         0x2

Name:         Type
Type:         REG_DWORD
Data:         0x10

Key Name: SYSTEM\CurrentControlSet\Services\<TP-NAME>\Security
```

Installation Example

The symbolic destination of the R/3 target system (host: hs5001, dispatcher port=sapdp93) is BIN.

The executable programs can be found in the following directory:
\\gw\saploc\P22\SYS\exe\run

The valid side info file *sideinfo* can be found in the following directory:
\\gw\saploc\P22\G44\data

The installation consists of the following steps:

1. Log on as the local administrator
2. Set system variable:
3. Call Registry Editor (REGEDT32.EXE).
4. Define the new value in the *HKEY_LOCAL_MACHINE on Local Machine* window:
   a) Directory: *SYSTEM\CurrentControlSet\Control\Session Manager\Environment*
   b) *Edit→Add Value*

      Value Name: side_info
      String: \\gw\saploc\P22\G44\data\sideinfo.
5. Select *Control Panel → System.* Set the *side_info* environment variable to the following path: **\\gw\saploc\P22\G44\data\sideinfo**'
6. Generate invokable TP:

   ```
   CD \\gw\saploc\P22\SYS\exe\run
   COPY gwhost.exe BIN.exe
   ```
7. Enter services:

   ```
   CD \\gw\saploc\P22\SYS\exe\run
   NTSCMGR install BIN -m gw
    -b \\gw\saploc\P22\SYS\exe\run\sapntstarttp.exe
    -p\\gw\saploc\P22\SYS\exe\run\BIN.exe
   ```
   The service will now be modified so that it can run under the gateway administrator's ID.
8. Make the side info entry:

```
Edit \\gw\saploc\P22\G44\data\sideinfo:
DEST=BIN
PROTOCOL=I
LU=hs5001
TP=sapdp93
```

You can start the TP BIN after restarting the *SNA Server* and the Service BIN.

BS2000 Host Systems

Purpose

The following topics are covered in connection with BS2000 host systems:

Software Requirements

The following software requirements are minimum specifications. SAP gives no guarantee regarding software from other manufacturers.

Hardware requirements for the R/2 System on the BS2000 host are not given in this section. These are described in the system documentation for the R/2 System.

Software requirements vary according to constellation:

- UTM-UTM connection
- BS2000 host with TCP/IP gateway

The respective requirements are described in both of the following topics.

UTM-UTM Connection

If you want to connect a UTM R/2 System with another UTM application, check that your system constellation meets the requirements detailed as follows.

Software requirements for the BS2000 host with UTM

Software	Description and version
Basic operating system	BS2000 as of V9.5
Data communications subsystem	UTM as of V3.2A UTM-D as of V1.2A
Network operating system	DCAM compatible with UTM version
SAP System	R/2 Release as of 4.3I or 5.0C

BS2000 host with TCP/IP gateway

Before connecting any computer (supporting TCP/IP) to a BS2000 host, check that your system constellation meets the requirements detailed as follows.

Software requirements for the BS2000 host with TCP/IP

Software	Description and version
Basic operating system	BS2000 as of V10.0
Data communications subsystem	DCAM as of V11
SAP System	R/2 Releases as of 4.3K or 5.0F

Configuration for a UTM-UTM Connection

For a UTM-UTM connection, you must generate UTM-D.

To do this refer to the section Generating UTM-D [Seite 193].

For information on possible errors refer to Errors in UTM-D [Seite 198]

Generating UTM-D

Communication between an R/2 UTM System and an external UTM application is based on UTM-D (UTM-VTV).

Distributed transaction processing with UTM-D requires a considerable amount of additional generation, so that UTM-D sessions are available between UTM applications.

The following KDCDEF instructions have been added with UTM-D. We have only made a short list of instructions here. You will find detailed information in the UTM brochure "Generating and Administering Applications".

- BCAMAPPL

  Defining further BCAM application names
  Example: BCAMAPPL B2111001

- CON

  Definining a logical connection between a local (SAP) and remote (partner) application
  Example: CON SI020101,PRONAM=HOST,LPAP=LWP0201

- LPAP

  Defining a remote application (name and characteristics of the connection)
  Example: LPAP LWP0201,SESCHA=PLU

- LSES

  Defining a session name for the connection between two applications
  Example: LSES SW020101,LPAP=LWP0201

- LTAC

  Defining the transaction code for the remote application
  Example: LTAC X1SA,TYPE=D

- SESCHA

  Defining characteristics for sessions
  Example: SESCHA PLU,PLU=N,CONNECT=Y

- UTMD

  Determining global values for local application
  Example: UTMD MAXJR=100

Addressing a Partner Process

A remote application must be addressed before messages can be sent to it. This is done with the APRO call. The following is specified:

- Is it a dialog or asynchronous process?
- Which process is addressed (LTAC name)?
- In which application (LPAP name) should this process be started (two-tier addressing)?

The remote process and the remote application are addressed with their logical names. For KDCDEF generation, these logical names are defined in the LTAC statement and are linked with the actual names of the partner application in the RTAC operand.

Generating UTM-D

The name of the logical process has the same function as the transaction code of the process. There are two ways of linking it with a partner application:

- By generating the KDCDEF instruction LTAC in the LPAP operand.

  In this case addressing is one-tier, as the partner application does not have to be specified in the APRO call.

- In the program, when calling up APRO.

  In this case addressing is two-tier. This is used when the same process is to be started in several applications (possibly on various computers).

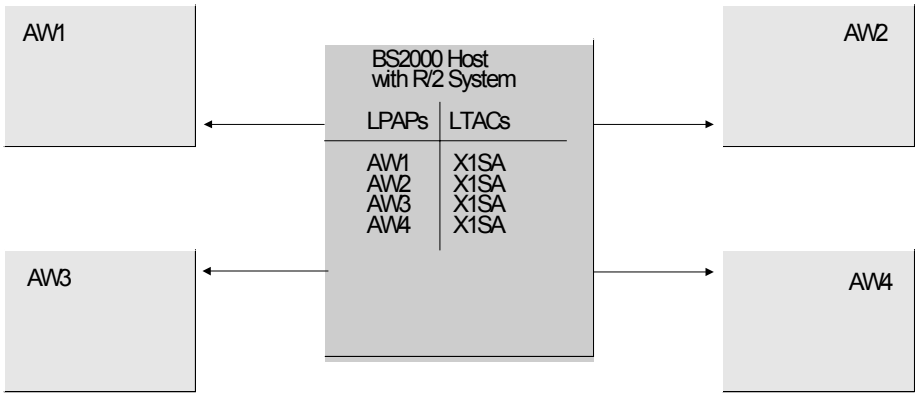

The same application is running under all four applications (AW1, AW2, AW3 and AW4). The SAP application on the host computer can address the individual applications by the APRO call in the program. The SAP computer link-up supports this concept with the table XCOM [Seite 112]. Here you can enter LPAP and LTAC for each partner. If you do not make an LPAP entry, one-tier addressing is assumed. However, two-tier addressing is recommended owing to its flexibility.

Parallel Connections

Parallel sessions are needed if you want to carry out several requests at the same time. For this you have to be able to set up several logical connections between the applications. To make this possible, additional BCAM applications have to be generated with the BCAMAPPL statement at one of the partners only. The CON statement adds the additional connections; the LSES statement adds the additional sessions required.

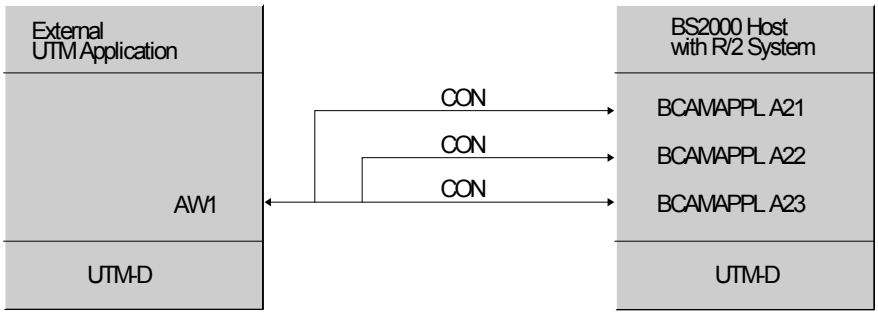

The TIME parameter in the LTAC statement:

The parameter TIME=(0,0) is necessary for defining the transaction code Y1SA for the DOUT driver. This is so that a driver is only started when a partner system session can be set up, as a

DOUT driver simulates synchronous VTV communication (no longer as of UTM-D V2.0). If the value is greater than zero, the messages are taken by UTM and temporarily stored until a session can be set up between both sessions.

KDCDEF Generation

The KDCDEF generation of the SAP R/2 application must always correspond with the partner UTM application. For KDCDEF generation the file with the UTM-D generation statements is specified via an additional procedure parameter.

The generation file KDCDEFD.HOST is delivered as an example.

This example contains the following statements:

1. Statements for communication between two host applications.

   Two connections are generated, one for S43 as PLU and one for S43 as SLU.

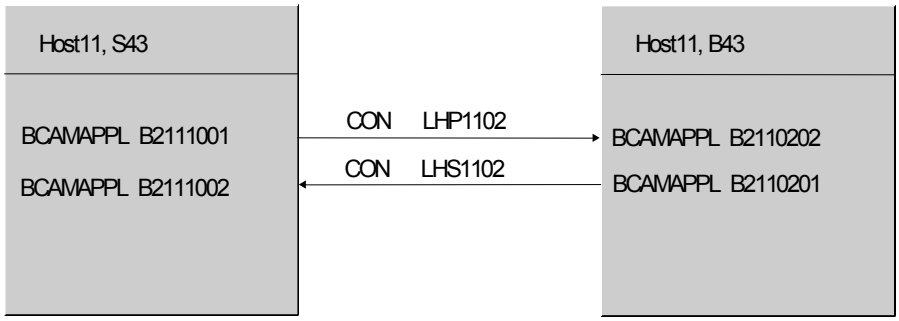

2. Statements for communication within an application (ideal for test purposes).

UTM-D Generation

```
*************************************************************
*                                                           *
* UTM-D GENERATION FOR BS2000: *
*                                                           *
*  xx serial number of the BCAMAPPL statement*
*************************************************************
BCAMAPPL B2110101
BCAMAPPL B2110102
*
*************************************************************
* SESSION CHARACTERISTICS FOR REQUEST RECEIVER / REQUEST INITIATOR
*
* SLU (secondary LU = request receiver - session)
*
* PLU (primary LU = request initiator - session)
*
*  Automatic connection set up, so that it does not matter
*  which application is started first.
*  No pacing, so that protocol expense is reduced.
```

Generating UTM-D

```
*************************************************************
SESCHA SLU,PLU=Y,CONNECT=Y,PACCNT=0
SESCHA PLU,PLU=N,CONNECT=Y,PACCNT=0

*************************************************************
*                                                           *
* LPAP defines remote application                                 *
*                                                           *
* LPAP Lvsppaa                                              *
*                                                           *
* L  for LPAP                                               *
* v  Connection type  W = WAN                                     *
*                     L = LAN                               *
*                     H = HOST                              *
* s  Session type            P = primary   (Request initiator)    *
*                     S = secondary (Request receiver)      *
* pp processor number of the remote application                   *
* aa serial number of the remote application                      *
*                                                           *
*********************************************************************
******
* 1102 = HOST11, B43 (PLU und SLU)
*
LPAP LHS1102,SESCHA=SLU
LPAP LHP1102,SESCHA=PLU
*
* 0201 = SINIX2, CUA application (SAP only SLU)
*
*************************************************************
* CON describes the connection to the partner                     *
*                                                           *
* CON bbxxaayy       (as BCAMAPPL)                                *
*************************************************************
* 1102 = HOST11, B43 (1 * PLU, 1 * SLU)
*
CON B2110201,PRONAM=HOST11,LPAP=LHP1102,BCAMAPPL=B2110102
CON B2110202,PRONAM=HOST11,LPAP=LHS1102,BCAMAPPL=B2110101
*
**************************************************************
*
* LSES describes a session
*
* LSES Svppaaxx
*
* S  Session
* v Connection type   H = HOST
*
* pp Processor number of the remote application
* aa Application number of the remote application
* xx serial number
*
**************************************************************
*
* 1102 = HOST11, B43 (2 Sessions, 1 * PLU, 1 * SLU)
*
LSES SH110201,LPAP=LHS1102,RSES=SH111002
LSES SH110202,LPAP=LHP1102,RSES=SH111001
*
*************************************************************
* Local connections / sessions for test purposes            *
*************************************************************
*
BCAMAPPL S4301
LPAP     S4301,SESCHA=PLU
CON      S4302,PRONAM=HOST11,LPAP=S4301,BCAMAPPL=S4301
LSES     S32S1,LPAP=S4301,RSES=S43S2
*
```

```
BCAMAPPL S4302
LPAP     S4302,SESCHA=SLU
CON      S4301,PRONAM=HOST11,LPAP=S4302,BCAMAPPL=S4302
LSES     S32S2,LPAP=S4302,RSES=S43S1
*********************************************************
* Transaction codes                                     *
*********************************************************
*
LTAC X1SA,TYPE=D
LTAC Y1SA,TYPE=A,WAITTIME=(0,0)
*
LTAC Y2SA,TYPE=A,WAITTIME=(1,0)
*************************************************************
```

Errors in UTM-D

As soon as two UTM applications are active, UTM tries to set up all the UTM-D sessions generated, provided that CONNECT=Y was specified in the SESCHA statement.

UTM records error messages on session setup in the SYSLOG file.

You can evaluate the SYSLOG file in the current application. First write the current SYSLOG buffer in the file via the UTM administration interface with the command KDCDIAG SYSLOG=WRITE.

With the UTM.PROC(SYSLOG) procedure, which SNI supplies, you can evaluate the SYSLOG file with the following UTM service programs:

- KDCCSYSL
- KDCPSYSL

You can look up the meaning of the K messages in the SYSLOG file in the UTM document "Generating and Administering Applications".

If no sessions were set up, the following message appears online when initiating communication from the SAP system:
781 Error 40Z Makro KD10 / APRO

Error message explanation:
KCRCCC = 40Z / KCRCDC = KD10 for APRO call (Message in SAP system log): No connection (session) to partner application

Installation notes:

- You have to create the SAP file DOT and format it with SAPVSFO.
- You have to set up a SAP user in Client 0, with the name RSDRIVER, the password DOUT and transaction authorization TM39.
  In Release 5.0, the SAP user must be of the CPIC type.

Up-to-date notes on installation can be found in the introduction to installation issued for each SAP Release.

Configuration for a TCP/IP Connection

For up-to-date information, you should read the file SAPGW.README, which is delivered with the software.

The SNI product DCAM supports TCP/IP connections as of Version 11.

A large number of computer systems are thus able to communicate with programs and applications under BS2000.

A workstation is connected via TCP/IP, and a SAP Gateway is used on UNIX or under BS2000 (depending on where the connection is set up from).

Communication with a workstation via TCP/IP is possible both for R/2 as a DCAM application and for R/2 as an UTM application.

As the R/2 software is not able to communicate directly via a TCP/IP connection, an adapter is required. The adapter is connected to R/2 (as a DCAM or UTM application) via TCP/IP on the one side, and to DCAM, on the other side.

Depending on the initiator of the communication (R/2 or partner), this function is performed under BS2000 by the *gwhost* communications program or in the central SAP Gateway:-

- Connection Setup to the R/2 System

  If a connection to an R/2 System is built up by a partner, which can be a non-SAP program, an R/3 System or a SAPGUI of the CUA Interface, the SAP Gateway running under BS2000 is addressed. The SAP Gateway handles the connection to the R/2 System.

  In general, the SAP Gateway under BS2000 is required once only, as it can maintain connections to any number of R/2 Systems.

  For every connection, a work process opens a DCAM application, which logs on to the SAP System.

- Connection Setup by the R/2 System

  A connection setup by the R/2 System to a non-SAP program or an R/3 program is made via the SAPGWHO tasks which run under BS2000. As an R/2 application is started, these tasks are started according to the number of tasks specified (SAPB2CSA, as of 5.0F in the profile).

  These tasks are allocated to an R/2 System.(They run under its user name.) The number of parallel connections (built up from R/2) depends on the number of tasks started.

  During connection setup by the R/2 System, the task SAPGWHO does not address the SAP Gateway under BS2000 but the SAP Gateway under UNIX, as an external program written in C can only be started from there. The side info file must contain a relevant entry.

Setting up communication with the R/2 System via TCP/IP requires a series of actions. These actions are described in the following topics:

- Generating BCAM [Seite 201]
- Generating UTM [Seite 203]

  (If R/2 is under UTM)

Configuration for a TCP/IP Connection

- Maintaining the Side Info File in BS2000 [Seite 204]

Generating BCAM

In a BCAM generation (up to V11), you must define all the TCP/IP connections to computers.

You must observe the following points:

- The XSYSP entry for your own host must contain a SOKHOST name, which must match with PRONAM.
- For any UNIX computer or workstation which is to communicate with BS2000 via TCP/IP, an XPRO entry with SOKHOST must exist.

```
*************************************************************
*
*        SPECIFICATION OF THE BS2000 HOST
*
*************************************************************
*
*
         XSYSP PRONAM=HOSTBS2,
*
               REGNR=235,
*
               PRONR=31,
*
               MAXTSDU=32767,
*
               SOKHOST=HOSTBS2,
*
               EINSATZ=HOST/BCAM
*
       .........
       .........
*
*************************************************************
*
*        SPECIFICATION OF LAN CONNECTION---> TCP/IP
*
*************************************************************
*
*
         XLTNG UEPROZ=CSMACD,
*
               UEWEG=LAN,
*
               IPADR=151.52.45.5,
*
               LANADR=080014816480,
*
               LTGNAM=LAN31,
```

Generating BCAM

```
*
                DEVTYP=TRANS0,
*
                DEVMN=(Y0,Y1)
*
          XKNOT KNOTNAM=LAN31,
*
                IPSNMAS=255.255.255.0
        .........
        .........
*
*
*************************************************************
*
*         SPECIFICATION OF A UNIX SYSTEM
*
*************************************************************
*
*
          XPRO  PRONAM=UX0001,
*
                ROUTNAM=UX0001X,
*
                IPADR=151.52.80.8,
*
                SOKHOST=UX0001,
*
                PROFIL=(TCP,IP),
*
                PROTYP=HOST,
*
                NAKNO=JA
*
```

Generating UTM

If the SAP Gateway in the BS2000 host is to set up a connection to an R/2 System under UTM, you must define the stations used by the SAP Gateway.

You do this by defining a single terminal pool as in the following example:

```
TPOOL PRONAM=<hostname>,PTYPE=APPLI,LTERM=GW00,NUMBER=100
```

<hostname> is the name of the host on which the SAP Gateway runs under BS2000.

If you do not intend to work with pools, you must make sure that the PTERM names match the DCAM application names of the gateway work processes. They have the following structure:

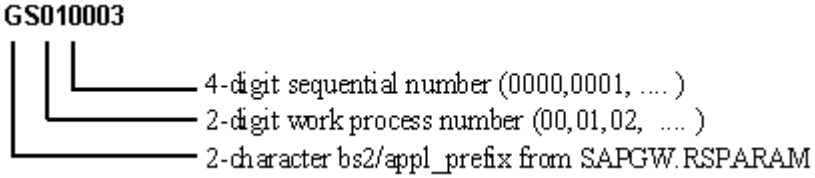

If you are using the SAPGWHO tasks, you must always generate terminal pools.

You must call up the SAPKCDEF procedure from SAP.PROCLIB specifying GEN=ALL, to have the KDCFILE re-generated and the SAPU1CM re-assembled:

```
/CALL SAP.PROCLIB(SAPKCDEF),GEN=ALL,.....
```

Maintaining the Side Info File in BS2000

The side info file for the SAP Gateway in BS2000 is accessible under the user ID of the SAP Gateway. The file name is SAPGW.DATA.SIDEINFO. It is protected by a read password, which you can find in the installation procedure.

When configuring the side info file, you must distinguish between the types of communication setup:

- Connection Setup to the R/2 System [Seite 205]
- Connection Setup by the R/2 System [Seite 206]

Connection Setup to the R/2 System

If a communication link is to be set up to R/2, you can optionally use the side info file. However, you are not required to use it. In the parameter file SAPGW.RSPARAM, you can specify whether you want to use it or not (with the parameter *bs2/use_sideinfo*).

If you do not use a side info file, then the SAP Gateway uses the incoming destination specification as the name of the application to which the connection is to be set up. The destination name is specified in the non-SAP or R/3 ABAP/4 program in the initialization call. If you are working with the CUA Interface, then you can specify the destination name on the logon screen.

If you use the side info file, then you must specify an entry as in the following example:

DEST=	Incoming destination name
LU=	Application name of the target SAP System
TP=X1SA	always "X1SA"
PROTOCOL=C	always "C"

Example:
You wish to address the R/2 application S50 under the name BS2S50.

```
DEST=BS2S50
LU=S50
TP=X1SA
PROTOCOL=C
```

If a side info file is used, an application is only reachable if the side info file contains a corresponding entry.

Connection Setup by the R/2 System

When the R/2 System sets up a connection, the program gwhost identifies the destination by using the side info file.

In the R/2 System, the destination specified in the ABAP program identifies the TP name in table XCOM [Seite 112]. The *gwhost* program uses this name to identify the destination in the side info file SAPGW.DATA.SIDEINFO.

The side info entry must be as follows:

DEST	=	TP from the R/2 table XCOM
GWHOST	=	UNIX node with SAP Gateway
GWSERV	=	Service of the SAP Gateway
LU	=	UNIX node of the partner program (C or R/3)
TP	=	Name of the partner program
PROTOCOL	=	"I" for communication with R/3 "E" for communication with non-SAP C program

Parameter Usage in SAPGWHO Jobs

When an R/2 System in a BS2000 host sets up communication, the job SAPGWHO (programm *gwhost*) assumes the functions of the communications program.

The relevant jobs are generated at installation in SAP.JOBLIB (Release 5.0).

The appropriate parameters for R/2 application name and trace level are automatically used.

The number of SAPGWHO jobs to be started for an R/2 application and their priority is defined via profile parameters (from 5.0F) (transaction code TM26, **BS2000-specific parameters** → **BS/2 job parameters**).

Examples of Connection Setup from the R/2 System

The following examples show the interplay of the XCOM table and the side info file.

- Example 1: R/2 → R/3

  An ABAP program in an R/2 Systems establishes a connection to an R/3 System with the instance number **95**. The R/3 System runs on computer **ux0001**, while the SAP Gateway runs on is0023.

  The ABAP program uses the symbolic destination **EXMPL1**.

  Entry in table XCOM :

```
Symb. Dest.   LU      TP        Comm. Type
-----------------------------------------
EXMPL1        -       R3TEST    -
```

  Entry in file sideinfo:

```
DEST=R3TEST
GWHOST=is0023
GWSERV=sapgw95
```

```
LU=ux0001
TP=sapdp95
PROTOCOL=I
```

- Example 2: R/2 → C program

  An ABAP/4 program in an R/2 Systems sets up a connection to a non-SAP C program **cif**, which is to be started on UNIX computer **ux0001**. The SAP Gateway also runs on ux0001. The service that the SAP Gateway uses is **00**.

  The ABAP program uses the symbolic destination **DVSTEST**.

  Entry in table XCOM :

```
Symb. Dest.   LU      TP      Comm. Type
----------------------------------------
DVSTEST       -       CIF0    -
```

  Entry in file sideinfo:

```
DEST=CIFO
GWHOST=ux0001
GWSERV=sapgw00
LU=ux0001
TP=cif
PROTOCOL=E
```

  R/2 under UTM:
  For the parameter **Comm. Type** (communications type), set the value **H**.

R/3 Directory Tree (Under UNIX)

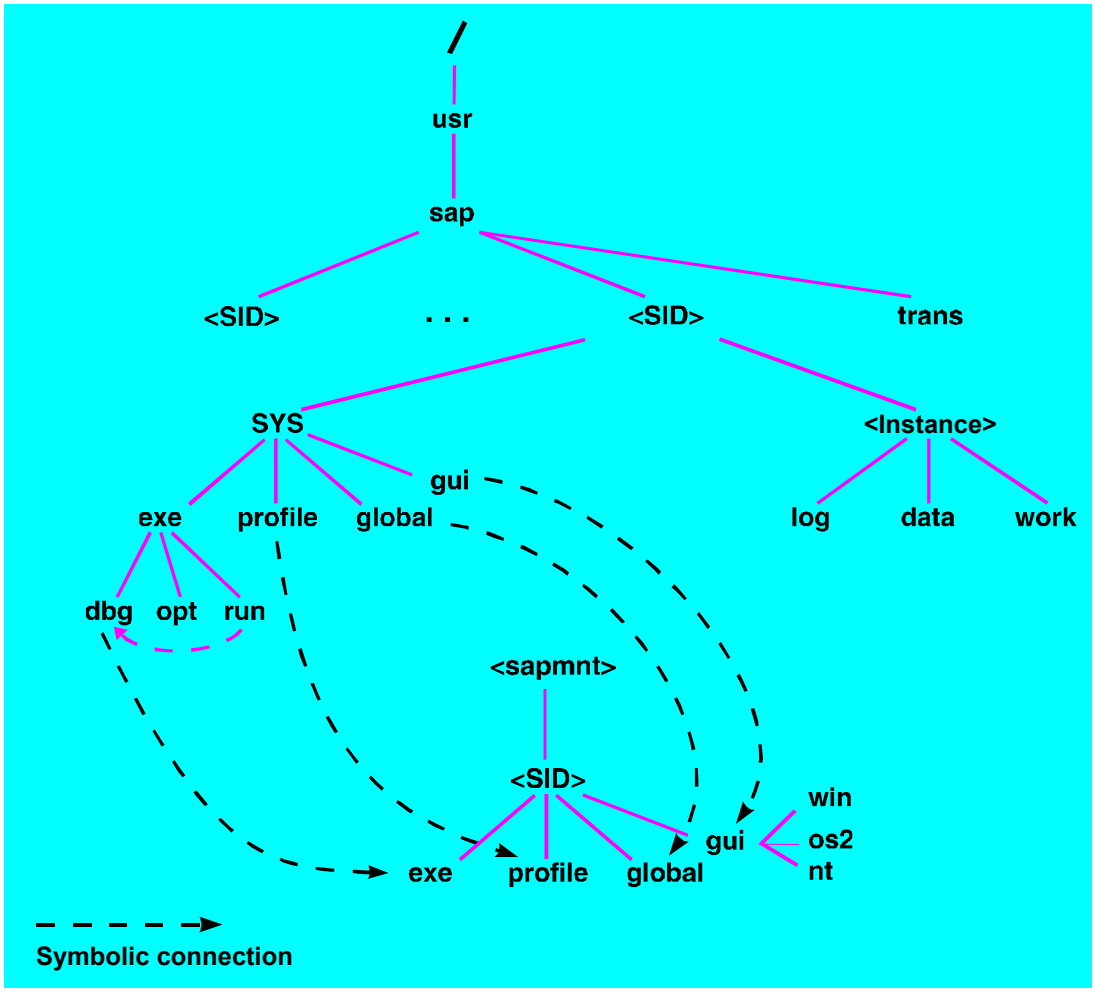

Hosts and Services in the TCP/IP Network

Communication between R/3 hosts is based on the TCP/IP transport protocol and the SAP gateway *(CPI-C Handler)*.

All hosts and SAP services in the network should be known to each other. For this you have to maintain the *hosts* and *services* files.

If you want to use OS/2 hosts in a TCP/IP environment, you need a TCP/IP component. SAP currently supports the following product: *IBM TCP/IP Version 2*

Defining Hosts

Host names are entered in the *hosts* file.
The entries in the next example have the following format:

<Internet address> <host name> <host name.sap-ag.de> # user

```
155.56.66.19      hw1115 hw1115.wdf.sap-ag.de   # Müller
155.56.66.20      hw1194 hw1194.wdf.sap-ag.de   # Meier
155.56.66.21      hw1213 hw1213.wdf.sap-ag.de   # Schmitt
155.56.66.22      hw1247 hw1247.wdf.sap-ag.de   # Huber
```

Testing Connections

You can test a connection between hosts with the following command:

```
ping <hostname>
```

Defining Services

R/3 services are entered in the *services* file.

This file contains the official service names with the corresponding port numbers and protocols, which the services use. Optional alias names can also be defined in it.

The entries have the following format:

<Service name> <port number/protocol> <optional alias name>

```
sapdp00   3200/tcp
sapdp01   3201/tcp
sapdp02   3202/tcp
sapgw00   3300/tcp
sapgw01   3301/tcp
sapgw02   3302/tcp
```

Using SAP Test Programs

In the following topics, you will learn how to use the SAP test programs for testing connections:

Available SAP Test Programs

The test programs undertake CPI-C communication. The following test programs are available:

Test programs

Programs	Programs Written in C	ABAP Programs
Calling	ccpict1	acpict1
Callable	ccpict2	acpict2

Each calling program (C or ABAP) can call one of the callable programs (C or ABAP).

These test programs therefore let you check program-to-program communication for all constellations.

ABAP test programs in R/2:

The SAP test programs are delivered with the CPI-C development libraries. The ABAP programs are directly available in new Releases of R/2 Systems. Otherwise you must upload these programs in your R/2 System.

Special Features

There are some special features for ABAP programs and programs written in C.

Programs Written in C

The names of the programs written in C end in t or s. These letters indicate the protocol on which communication is based:

`ccpict1s` SNA is the protocol

`ccpict1t` TCP/IP is the protocol

You must create a side info file in your work directory before starting the calling C program (see section “Side Info Tables”, Side Information on OS/2, WindowsNT, UNIX and AS/400 Platforms: Sideinfo [Seite 114]

The calling C program records the program activities on the screen (stdout). The C program called creates the trace file **`cpict2t.trc`**.

You can activate the CPI-C trace function before the start of the calling C program as follows:

- **`CPIC_TRACE=2`** in the side info file
- Environment variable **`CPIC_TRACE=2`**

Program-to-program communication normally takes place via the SAP gateway. You do not need the SAP gateway if the platform of each partner program supports the SNA protocol LU6.2. This is possible with the following constellations:

- C Program ↔ R/2 Program
- C Program ↔ C Program

Here, use the SNA-specific C programs.

ABAP Programs

Both the calling and callable ABAP programs can be found in an R/2 or R/3 System.

The calling ABAP program records the program activities on the screen.

Program Parameters to be Specified: Explanation

You must specify parameters for the calling program. The calling program can be an ABAP or C program.

ABAP Program

When executing the ABAP program, you must specify the following program parameters:

DEST	<destination>	destination according to TXCOM/XCOM
ABAP	<' '/X>	X, if the partner is acpict2
CONVERT	<' '/X>	X, if conversion is required
USER	<user>	SAP user name
PWD	<password>	password

"Testing a Connection" only details those program parameters which require an entry.

Program Written in C

When executing a program written in C, you must specify the following program parameters:

dest	<destination>	destination according to sideinfo
-abap		if the partner is acpict2
-conv		if conversion is required
-usr	<user>	SAP user name
-pwd	<password>	password

Requirements for Starting an External Partner Program

There may be several reasons why a called CPI-C program cannot be started.

First decide what type of program it is:

- A local program
- A remote program started via *Remote Shell*

Starting a Local Target Program

The SAP Gateway starts a local CPI-C program via *fork/exec*.

To avoid errors, ensure the following two conditions are met:

- The program is located in the search path of the Gateway ID.
- It is executable for the Gateway ID.

Log on with the Gateway ID and check whether the program to be started is in the search path of the Gateway ID:
UNIX: **`which <program>`**

Starting the Target Program via *Remote Shell*

A program is started on a remote computer via *Remote Shell*. For this, the following requirements must be met on the remote computer.

- The Gateway ID must exist.
- The Gateway compter must be entered in the.*rhosts* file. The.*rhosts* file must be located in the HOME directory or in the path of the Gateway ID.
- The program to be started must be intalled in the HOME directory of the Gateway ID.

Log on with the Gateway ID and check, using Remote Shell, whether the authorizations necessary for calling a remote program exist, and that this is in the search path of the Gateway ID:
UNIX: **`remsh <computer> date`**
which <program>

The Gateway processes in BS2000 are used exclusively for switching connections to R/2 Systems.

You cannot, for example, start programs outside the R/2 System in the BS2000 host via the SAP Gateway.

AS/400 only: AS/400 does not have a Remote Shell. Partner programs can, therefore, only be started locally.

Testing Connections

When testing connections, you must specify various parameters, depending on whether the calling program is an ABAP/4 program or a C program:

For more details, refer to the following topics:

Calling Program: ABAP Program in R/3 [Seite 217]

Calling Program: ABAP Program in R/2 [Seite 218]

Calling Program: C Program [Seite 220]

Calling Program: ABAP Program in R/3

You call the test program **acpict1** with transaction SE38.

Partner: ABAP Program in R/3

Define the following program parameters:

DEST <dest>ABAP XUSER<user name>PWD <password>

You must define the following parameters in the TXCOM side info table.

DEST	LU	TP	Prot
<dest>	<R/3 computer>	<Dispatcher service>	I

Partner: ABAP Program in R/2

Define the following program parameters:

DEST	*<destination>*
ABAP	*X*
CONVERT	*X*
USER	*<user name>*
PWD	*<password>*

In the TXCOM side info table, you only have to define the DEST and Prot parameters (LU and TP are ignored):

DEST	LU	TP	Prot
<dest>	-	-	C

You must define the following parameters in the side info table on the gateway platform:

```
DEST            =<dest>
LU              =<Logical unit>
TP              TP=X1SA
```

Partner: Program Written in C

Define the following program parameter:

DEST	<destination according to TXCOM>

You must define the following parameters in the TXCOM table:

DEST	LU	TP	Prot
<dest>	<partner host>	ccpict2t	E

Calling Program: ABAP Program in R/2

You call the `acpict1` test program with transaction TM38.

Partner: ABAP Program in R/3

Define the following program parameters:

DEST	*<destination>*
ABAP	*X*
CONVERT	*X*
USER	*<user name>*
PWD	*<password>*

Here, the SAP communications programs *gwhost* for CICS or *gwims* for IMS are required for communication. For more details, refer to the topic Parameters on SNA Subsystem Platforms in R/2 [Seite 105].

On a BS2000 host, *gwhost* is required (Job SAPGWHO). For more information see the topic Maintaining the Side-Info File in BS2000 [Seite 204] under “Connection Setup by R/2”.

You must define the following parameters in the XCOM side info table: **DEST**	**LU**	**TP**
<dest>	<LU>	<Alias for gwhost or gwims>

You must define the following parameters in the side info table on the gateway platform:

DEST	=<	Alias for gwhost or gwims>
GWHOS	=<	SAP gateway computer>
GWSERV	=<	SAP gateway service>
PROTOCOL=E	=	I
LU	=<	R/3 computer>
TP	=<	SAP dispatcher service>

Partner: ABAP Program in R/2

Define the following program parameters:

DEST	<destination>	
ABAP	X	
CONVERT	X	
USER	<user name>	
PWD	<password>	
You must define the following parameters in the XCOM side info table: **DEST**	**LU**	**TP**

<dest>	<LU>	X1SA

- Communication between R/2 Systems is only possible on IBMhosts when CICS is used as the data communications system.
- Local communication on an R/2 IBM host is not possible. CICS does not support a local *Conversation* via SNA-LU6.2.
- A local *Conversation* is possible for SNI UTM systems.

Partner: Program Written in C

As the partner is not an SAP program, you only have to specify the following program parameter:

DEST	<destination>

Here, the SAP communications programs **gwhost** for CICS or **gwims** for IMS are required for communication. For more details, refer to the topic Parameters on SNA Subsystem Platforms in R/2 [Seite 105].

In a BS2000 host, **gwhost** is required (Job **SAPGWHO**). For more information see the topic Maintaining the Side-Info File in BS2000 [Seite 204] under “Connection Setup by R/2”.

You must define the following parameters in the XCOM side info table: **DEST**	**LU**	TP
<dest>	<LU>	<Alias for gwhost or gwims>

You must define the following parameters in the side info table on the gateway platform:

```
DEST            =        <Alias for gwhost or gwims>
GWHOST          =        <SAP gateway computer>
GWSERV          =        <SAP gateway service>
PROTOCOL        =        ELU  =      <partner computer>
TP    =          ccpict2t
```

Calling Program: Program Written in C

Call the **ccpict1t** C program with the appropriate parameters.

Partner: ABAP Program in R/3

You must define the following parameters in the sideinfo file for the calling program:

DEST	=	<user defined destination>
LU	=	<R/3 computer, on which acpict2 is running>
TP	=	<SAP dispatcher service>
GWHOST	=	<SAP gateway computer>
GWSERV	=	<SAP gateway service>
PROTOCOL	=	I

You call the **ccpict1t** test program as follows:

```
ccpict1t -dest <DEST in sideinfo> -abap -usr <SAP user name> -pwd
<password>
```

AS/400:

```
CALL PGM(CCPICT1T) PARM('-dest' '<DEST in sideinfo>' '-abap' '-usr'
'SAP user name>' '-pwd' '<password>')
```

Partner: ABAP Program in R/2

You must define the following parameters in the sideinfo file **sideinfo** for the calling program:

DEST	=	<user defined destination>
GWHOST	=	<SAP gateway computer>
GWSERV	=	<SAP gateway service>
PROTOCOL	=	C

You must define the following parameters in the sideinfo file **sideinfo** for the SAP gateway:

DEST	=	<user defined destination>
LU	=	<Logical unit>
TP	=	X1SA
PROTOCOL	=	C

Note the platform-specific features of the side-info entries (see Side Information on OS/2, Windows NT, UNIX and AS/400 Platforms: Sideinfo [Seite 114]).

You call the ccpict1t test program as follows:

```
ccpict1t -dest <DEST in sideinfo> -abap -conv -usr <SAP user name> -pwd
<password>
```

AS/400:
```
CALL PGM(CCPICT1T) PARM('-dest' '<DEST in sideinfo>' '-abap' '-conv' '-usr'
'<SAP usr name>' '-pwd' '<password>'
```

Partner: Program Written in C

You must define the following parameters in the sideinfo file **sideinfo** for the calling program:

DEST	=	<user defined destination>
LU	=	<computer, on which ccpict2 is to run>
TP	=	ccpict2
GWHOST	=	<SAP gateway computer>
GWSERV	=	<SAP gateway service>
PROTOCOL	=	E

You call the ccpict1t test program as follows:
```
ccpict1t -dest <user defined destination>
```

AS/400:
```
CALL PGM(CCPICT1T) PARM ('-dest' '<user defined destination>')
```

Connecting R/3 and R/2 on an IBM Host

The following example configurations are provided with the system:

Host Configuration

The configuration on the SNA host is explained with the help of the following examples:

VTAM Definitions [Seite 224]

CICS Definitions for Dependent LU [Seite 226]

CICS Definitions for Independent LU [Seite 229]

IMS Definitions [Seite 231]

VTAM Definitions

```
*****************************************************************
*
*         VTAM PU DEFINITION VIA 3172
*
*****************************************************************
         VBUILD TYPE=SWNET,MAXGRP=1,MAXNO=1
PTRMRB   PU    ADDR=C1,CPNAME=PTRMRB,USSTAB=ISTINCDT,DLOGMOD=LU62CPIC,
*
               IRETRY=YES,MAXOUT=7,MODETAB=SAPMOD,PASSLIM=7
LTRMRB0  LU    LOCADDR=0
LTRMRB1  LU    LOCADDR=1
LTRMRB2  LU    LOCADDR=2
LTRMRB3  LU    LOCADDR=3



*---------------------------------------------------------------*
*     MODETABLE/LOGMODE DEFINITION                               *
*---------------------------------------------------------------*

         PRINT GEN
SAPMOD   MODETAB

*****************************************************************
*         LU6.2  RUSIZE 2048 PACING 8 fuer dependent LU6.2       *
*****************************************************************
LU62CPIC MODEENT LOGMODE=LU62CPIC,FMPROF=X'13',TSPROF=X'07',
*
               PRIPROT=X'B0',SECPROT=X'B0',COMPROT=X'50B1',TYPE=X'00',
*
               RUSIZES=X'8888',PSERVIC=X'06020000000000000002C00',
*
               PSNDPAC=X'08',SSNDPAC=X'08',SRCVPAC=X'08'
*****************************************************************


*****************************************************************
*         LU6.2  RUSIZE 2048 PACING 8 fuer independent LU6.2     *
*****************************************************************
LU62INDP MODEENT LOGMODE=LU62INDP,FMPROF=X'13',TSPROF=X'07',
*
               PRIPROT=X'B0',SECPROT=X'B0',COMPROT=X'50B1',TYPE=X'00',
*
               RUSIZES=X'8888',PSERVIC=X'06020000000000000002C00',
*
               PSNDPAC=X'08',SSNDPAC=X'08',SRCVPAC=X'08'
*****************************************************************
```

The RU Size and Pacing parameters have an ongoing effect on the data throughput. Both parameters are set to a ‘medium’ value in the example above. A smaller RU Size may be necessary for WAN connections, but in other cases the best performance may be achieved by using a still larger value.

Whatever values are chosen, it is important that the configurations for both partner systems (host and workstation) contain the same values.

CICS Definitions for Dependent LU

```
OBJECT CHARACTERISTICS
 CEDA  View
  TErminal        : MRB1
  Group           : SAPLU62
  AUTINSTModel    : No                  No ! Yes ! Only
  AUTINSTName     :
 TERMINAL IDENTIFIERS
  TYpeterm        : LU62T
  Netname         : LTRMRB1
  Console         : No                  No ! 0-127 ! 129-250
  REMOTESystem    :
  REMOTEName      :
  Modename        : LU62CPIC
 ASSOCIATED PRINTERS
  PRINTER         :
  PRINTERCopy     : No                  No ! Yes
  ALTPRINTEr      :
  ALTPRINTCopy    : No                  No ! Yes
 PIPELINE PROPERTIES
  POol            :
  TAsklimit       : No                  No ! 1-32767
 OPERATOR DEFAULTS
  OPERId          :
  OPERPriority    : 000                 0-255
  OPERRsl         : 0                   0-24,...
  OPERSecurity    : 1                   1-64,...
  Userid          :
 TERMINAL USAGES
  TRansaction     :
  TErmpriority    : 000                 0-255
  Inservice       : Yes                 Yes ! No
 PRINTER DATA
 SESSION SECURITY
  Securityname    :
  ATtachsec       : Local               Local ! Identify ! Verify
  Bindpassword    :                     PASSWORD NOT SPECIFIED


OBJECT CHARACTERISTICS
 CEDA  View
  TYpeterm        : LU62T
  Group           : SAPTYPE
 RESOURCE TYPE
  DEVice          : APPC
  TERmmodel       :
  SESsiontype     :
  LDclist         :
  SHippable       : No                  No ! Yes
```

```
MAPPING PROPERTIES
 PAGesize       : 001, 040          0-999
 ALTPage        : 000, 000          0-999
 ALTSUffix      :
 FMhparm        : No                 No ! Yes
 OBOperid       : No                 No ! Yes
PAGING PROPERTIES
 AUTOPage       : Yes                No ! Yes
DEVICE PROPERTIES
 DEFscreen      : 000, 000          0-999
 ALTSCreen      :   ,              0-999
 APLKybd        : No                 No ! Yes
 APLText        : No                 No ! Yes
 AUDiblealarm   : No                 No ! Yes
 COLor          : No                 No ! Yes
 COPy           : No                 No ! Yes
 DUalcasekybd   : No                 No ! Yes
 EXtendedds     : No                 No ! Yes
 HIlight        : No                 No ! Yes
 Katakana       : No                 No ! Yes
 LIghtpen       : No                 No ! Yes
 Msrcontrol     : No                 No ! Yes
 OBFormat       : No                 No ! Yes
 PARtitions     : No                 No ! Yes
 PRIntadapter   : No                 No ! Yes
 PROgsymbols    : No                 No ! Yes
 VAlidation     : No                 No ! Yes
 FOrmfeed       : No                 No ! Yes
 HOrizform      : No                 No ! Yes
 VErticalform   : No                 No ! Yes
 TEXTKybd       : No                 No ! Yes
 TEXTPrint      : No                 No ! Yes
 Query          : No                 No ! Cold ! All
 OUtline        : No                 No ! Yes
 SOsi           : No                 No ! Yes
 BAcktrans      : No                 No ! Yes
 CGcsgid        : 00000, 00000      0-65535
SESSION PROPERTIES
 AScii          : No                 No ! 7 ! 8
 SENdsize       : 02048              0-30720
 RECEivesize    : 02048              0-30720
 BRacket        : Yes                Yes ! No
 LOGMode        :
DIAGNOSTIC DISPLAY
 ERRLastline    : No                 No ! Yes
 ERRIntensify   : No                 No ! Yes
 ERRColor       : NO                 NO ! Blue ! Red ! Pink ! Green !
                                     Turquoise ! Yellow ! NEutral
 ERRHilight     : No                 No ! Blink ! Reverse ! Underline
OPERATIONAL PROPERTIES
 AUTOConnect    : No                 No ! Yes ! All
 ATi            : Yes                No ! Yes
 TTi            : Yes                Yes ! No
```

CICS Definitions for Dependent LU

```
  CReatesess      : Yes                No ! Yes
  RELreq          : Yes                No ! Yes
  DIscreq         : Yes                Yes ! No
  Nepclass        : 000                0-255
  SIgnoff         : Yes                Yes ! No ! Logoff
 MESSAGE RECEIVING PROPERTIES
  ROutedmsgs      : None               All ! None ! Specific
  LOGOnmsg        : No                 No ! Yes
 APPLICATION FEATURES
  BUildchain      : Yes                No ! Yes
  USerarealen     : 000                0-255
  Ioarealen       : 02048, 02048      0-32767
  UCtran          : No                 No ! Yes
 RECOVERY
  RECOVOption     : Sysdefault         Sysdefault ! Clearconv !
Releasesess !
                                       Uncondrel ! None
  RECOVNotify     : None               None ! Message ! Transaction
```

CICS Definitions for Independent LU

```
OBJECT CHARACTERISTICS
 CEDA  View
  Connection      : MRB0
  Group           : PU21LU62
 CONNECTION IDENTIFIERS
  Netname         : LTRMRB0
  INDsys          :
 CONNECTION PROPERTIES
  ACcessmethod    : Vtam                Vtam ! IRc ! INdirect ! Xm
  Protocol        : Appc                Appc ! Lu61
  SInglesess      : No                  No ! Yes
  Datastream      : User                User ! 3270 ! SCs ! STrfield !
Lms
  Recordformat    : U                   U ! Vb
 OPERATIONAL PROPERTIES
  AUtoconnect     : No                  No ! Yes ! All
  INService       : Yes                 Yes ! No
 SECURITY
  SEcurityname    :
  ATtachsec       : Local               Local ! Identify ! Verify
  Bindpassword    :                     PASSWORD NOT SPECIFIED


OBJECT CHARACTERISTICS
 CEDA  View
  Sessions        : MRB0S
  Group           : PU21LU62
 SESSION IDENTIFIERS
  Connection      : MRB0
  SESSName        :
  NETnameq        :
  MOdename        : LU62INDP
 SESSION PROPERTIES
  Protocol        : Appc                Appc ! Lu61
  MAximum         : 00100, 00050       0-32767
  RECEIVEPfx      :
  RECEIVECount    : No                  No ! 1-999
  SENDPfx         :
  SENDCount       : No                  No ! 1-999
  SENDSize        : 02048               1-30720
  RECEIVESize     : 02048               1-30720
 OPERATOR DEFAULTS
  OPERId          :
  OPERPriority    : 000                 0-255
  OPERRsl         : 0                   0-24,...
  OPERSecurity    : 1-64                1-64,...
  USERId          :
 SESSION USAGES
  Transaction     :
  SESSPriority    : 000                 0-255
```

CICS Definitions for Independent LU

```
 OPERATIONAL PROPERTIES
  Autoconnect    : No                 No ! Yes ! All
  INservice      :                    No ! Yes
  Buildchain     : Yes                Yes ! No
  USERArealen    : 000                0-255
  IOarealen      : 00000, 00000      0-32767
  RELreq         : No                 No ! Yes
  Discreq        : No                 No ! Yes
  NEPclass       : 000                0-255
 RECOVERY
  RECOVOption    : Sysdefault         Sysdefault ! Clearconv !
Releasesess !
                                      Uncondrel ! None
  RECOVNotify    : None               None ! Message ! Transaction
```

IMS Definitions

Not yet available.

HP Workstation Configuration

The configuration on the HP workstation is explained in the following:

SAP Configuration [Seite 233]

SNA Configuration for Dependent LU6.2 [Seite 237]

SNA Configuration for Independent LU6.2 [Seite 241]

SAP Configuration

The SAP gateway requires a file with the name *sideinfo* in the */usr/sap/<SID>/<INST>/data* directory. Each destination (R/2 system) requires exactly one entry. The LU pooling is performed by HP-SNAPlus. You can define several LU's for the same destination in SNAPlus. SNAPlus selects the next free LU when setting up a session.

CUA Interface

Not yet available.

R/2-R/3 Connections

Not yet available.

External Programs

Not yet available.

Example Sideinfo File

```
*******************************************************************
*       sideinfo  HP-Workstation
*       Date: 15.08.95
*******************************************************************
*
*
*******************************************************************
* CUA-Interface
* Destination is R/2-System K50 CICS
* At the SAPGUI, you must enter destination K50.
* LU=K50 is the name of partner-LU of SNAplus
*******************************************************************
DEST=K50
LU=K50
TP=X1SA
MODE_NAME=LU62APPC


*******************************************************************
* CUA-Interface
* Destination is R/2-System K50 IMS
* At the sapgui the destination must be entered as K50IMS. The suffixes
* LU=K50IMS is the name of partner-LU of SNAplus
*******************************************************************
DEST=K50IMS
LU=K50IMS01
TP=K50X1SA
```

SAP Configuration

```
MODE_NAME=LU62APPC


*******************************************************************
* R/3 -> R/2 connection (R/2 on CICS)
*
* The connection is initiated by the R/3 system.
* These entries are the same as for CUA Interface. Normally they must
be
* defined only once and may be used for both purposes.
*******************************************************************
DEST=K50
LU=K5001
TP=X1SA
MODE_NAME=LU62APPC


*******************************************************************
* R/2 -> R/3 connection (R/2 on CICS)
*
* The connection is initiated by the R/2 system.
* Via SNA a transaction program is started on the HP machine.
* This program searches an entry in the sideinfo file with a
destination identical
* to its own program name (GWHSTC11).
* The sideinfo file will be searched in the home directory of the user-
id
* of the owner of the executables.
* The program GWHSTC11 then establishes a connection to the R/3 System
defined
* by LU= (Host name of R/3-System) and TP= (service name of R/3-System)
via
* the SAP-Gateway defined by GWHOST= (name of SAP Gateway host) and
* GWSERV= (service name of SAP Gateway).
*******************************************************************
DEST=GWHSTC11
LU=hwsna01
TP=sapdp00
GWHOST=hwsna01
GWSERV=sapgw00
PROTOCOL=I
CPIC_TRACE=2


*******************************************************************
* External program
* Destination is R/2-System K50 CICS
*******************************************************************
DEST=K50
LU=K50
TP=X1SA
MODE_NAME=LU62APPC
GWHOST=iw1006
```

```
GWSERV=sapgw00
PROTOCOL=C
CPIC_TRACE=2


*******************************************************************
* External program
* Destination is R/2-System K50 IMS
*******************************************************************
DEST=K50IMS
LU=K50IMS
TP=K50X1SA
GWHOST=iw1006
GWSERV=sapgw00
PROTOCOL=C
CPIC_TRACE=2


*******************************************************************
* External program
* Destination is R/3-System C11
*******************************************************************
DEST=C11
LU=hwsna01
TP=sapdp00
GWHOST=hwsna01
GWSERV=sapgw00
PROTOCOL=I
CPIC_TRACE=2
```

Example TXCOM Entry:

```
Dest     LU        TP                Prot  Gateway-Host Gateway-Serv

 K50                                  C     ss0007      sapgw10
 EXT_HP   hwsna01   /usr/sap/C11/..  E     hwsna01     sapgw00

*The full path for TP is:  /usr/sap/C11/SYS/exe/run/ccpict2t
```

Example XCOM entry:

```
Maintain ATAB table   XCOM  Table of the symbolic destinations for CPI-
C
-------------------------------------------------------------------
Symbolic dest.      LU (Logical Unit)  TP (Transaction prog.) Comm.
type
-------------------------------------------------------------------
C11                     MRB1               GWHSTC11
EXT_HP                  MRB2               CCPICT2S                _
```

SNA Configuration for Dependent LU6.2

Example with 3 LUs to an R/2 System:

```
; ******************************************************************
; SNAplus Binary to Text Configuration Utility
; Copyright (C) 1993 Hewlett-Packard Company
; Binary Configuration   = deptexa.cfg
; Security File          = deptexa.sec
; File version           = 100.20
; ******************************************************************

; ******************************************************************
; Diagnostics Record (Mandatory)
; ******************************************************************
[DIAGNOSTICS]
connection           = ""                ; Name of network mgt
connection
UCF_user             = ""                ; User ID for UCF commands
error_log            = "/usr/lib/sna/sna.err"
                                         ; Error log file
audit_log            = "/usr/lib/sna/sna.aud"
                                         ; Audit log file
audit_level          = 10                ; Significant system events
send_overfl          = No                ; Send RTM when response
counter max
send_end             = No                ; Send RTM at end of session
stop_timer           = screen            ; Data first reaches the screen
boundary_1           = 0.5               ; RTM histogram time boundaries
boundary_2           = 1.0
boundary_3           = 2.0
boundary_4           = 5.0
pc_error_log         = "sna.err"         ; PC client error log file
pc_audit_log         = "sna.aud"         ; PC client audit log file

; ******************************************************************
; Local Node Record
; ******************************************************************
[NODE]
name                 = "TRNODE"          ; Local Node Name
description          = "Node for APPC"   ; Description of Local Node
network              = "DESAPW00"        ; Node Network Name

; ******************************************************************
; APPC Local LU Record
; ******************************************************************
[APPC_LOCAL_LU]
alias                = "LTRMRB1"         ; LU Alias
node                 = "TRNODE"          ; Local Node
description          = "Dependent local LU"
                                         ; Text description of LU
net_name             = "DESAPW00"        ; LU Network Name
```

SNA Configuration for Dependent LU6.2

```
LU_name                = "LTRMRB1"        ; Name of LU
LU_number              = 1                ; LU Number
session_lim            = 1                ; Session Limit
default_LU             = Yes              ; LU in pool of Default LUs
local_use              = No               ; LU can be used locally
partner_LU             = "X50, 0"         ; List of Partner LUs and Modes

; ****************************************************************
; APPC Local LU Record
; ****************************************************************
[APPC_LOCAL_LU]
alias                  = "LTRMRB2"        ; LU Alias
node                   = "TRNODE"         ; Local Node
description            = "Dependent local LU"
                                          ; Text description of LU
net_name               = "DESAPW00"       ; LU Network Name
LU_name                = "LTRMRB2"        ; Name of LU
LU_number              = 2                ; LU Number
session_lim            = 1                ; Session Limit
default_LU             = Yes              ; LU in pool of Default LUs
local_use              = No               ; LU can be used locally
partner_LU             = "X50, 0"         ; List of Partner LUs and Modes

; ****************************************************************
; APPC Local LU Record
; ****************************************************************
[APPC_LOCAL_LU]
alias                  = "LTRMRB3"        ; LU Alias
node                   = "TRNODE"         ; Local Node
description            = "Dependent local LU"
                                          ; Text description of LU
net_name               = "DESAPW00"       ; LU Network Name
LU_name                = "LTRMRB3"        ; Name of LU
LU_number              = 3                ; LU Number
session_lim            = 1                ; Session Limit
default_LU             = Yes              ; LU in pool of Default LUs
local_use              = No               ; LU can be used locally
partner_LU             = "X50, 0"         ; List of Partner LUs and Modes

; ****************************************************************
; Token Ring Connection Record
; ****************************************************************
[TR_CONN]
name                   = "TRCON"          ; Name of connection
node                   = "TRNODE"         ; Name of node
description            = "Token Ring connection"
                                          ; Description
remote_end             = host             ; Remote end is host
activation             = initially        ; Initially active
node_send              = "D9D.4E7C7"      ; Node id to send
node_rcv               = ""               ; Node id to receive
control_point          = "DESAPW00.PTRMXG"; Fully qualified control point
name
```

```
remote_address        = 400072A3FFFF     ; Address of remote TR network
remote_sap            = 04               ; Remote SAP address
retry_limit           = 10               ; Retry limit
rcv_ack_limit         = 2                ; Receive acknowledgment
threshold
send_ack_limit        = 1                ; Unacknowledged send threshold
max_btu               = 2057             ; Maximum BTU length
link                  = "TOKEN"          ; link

; ******************************************************************
; APPC Mode Record
; ******************************************************************
[APPC_MODE]
name                  = "LU62CPIC"       ; Mode name
mode_ID               = 0                ; Unique Mode ID
description           = "LU6.2 Dependent Mode"
                                         ; Description
connection            = "TRCON"          ; Connection used by this mode
priority              = high             ; Mode is High Priority
session_limit         = 1                ; Mode Session Limit
MCW                   = 0                ; Min Conwinner Sessions
partner_MCW           = 0                ; Partner Min Conwinner
Sessions
auto_act              = 0                ; Auto activated sessions
min_sendRU            = 256              ; Min Send RU size
max_sendRU            = 2048             ; Max Send RU size
send_pace             = 4                ; Send Pacing count
min_rcvRU             = 256              ; Min Receive RU size
max_rcvRU             = 2048             ; Max Receive RU size
rcv_pace              = 4                ; Receive Pacing count

; ******************************************************************
; APPC Remote LU Record
; ******************************************************************
[APPC_REMOTE_LU]
alias                 = "X50"            ; LU Alias
description           = "Remote CICS System"
                                         ; Text description of LU
net_name              = "DESAPW00"       ; LU Network Name
LU_name               = "X50"            ; Name of LU
SSCP_Alias            = "X50"            ; SSCP LU Alias
parallel_sess         = No               ; Parallel Sessions supported
conv_sec              = No               ; LU uses conversation level
security
session_sec            = none             ; No Session Level Security

; ******************************************************************
; Token Ring Link Record
; ******************************************************************
[TR_LINK]
name                  = "TOKEN"          ; Name of LU
description           = "Token Ring link"; Text description of LU
device_name           = "sna_TR"         ; Name of device file for link
```

SNA Configuration for Dependent LU6.2

```
port_number          = 0                ; Adapter port

; ******************************************************************
; Token Ring Link Usage Record
; ******************************************************************
[TR_USAGE]
node                 = "TRNODE"         ; Node name
link                 = "TOKEN"          ; Link name
incoming             = No               ; Incoming calls accepted
max_conn             = 1                ; Maximum number of connections
local_sap            = 04               ; Local SAP address
```

SNA Configuration for Independent LU6.2

Example

```
; ******************************************************************
; SNAplus Binary to Text Configuration Utility
; Copyright (C) 1993 Hewlett-Packard Company
; Binary Configuration   = indepexa.cfg
; Security File          = indepexa.sec
; File version           = 100.20
; ******************************************************************

; ******************************************************************
; Diagnostics Record (Mandatory)
; ******************************************************************
[DIAGNOSTICS]
connection           = ""                ; Name of network mgt
connection
UCF_user             = ""                ; User ID for UCF commands
error_log            = "/usr/lib/sna/sna.err"
                                         ; Error log file
audit_log            = "/usr/lib/sna/sna.aud"
                                         ; Audit log file
audit_level          = 10                ; Significant system events
send_overfl          = No                ; Send RTM when response
counter max
send_end             = No                ; Send RTM at end of session
stop_timer           = screen            ; Data first reaches the screen
boundary_1           = 0.5               ; RTM histogram time boundaries
boundary_2           = 1.0
boundary_3           = 2.0
boundary_4           = 5.0
pc_error_log         = "sna.err"         ; PC client error log file
pc_audit_log         = "sna.aud"         ; PC client audit log file

; ******************************************************************
; Local Node Record
; ******************************************************************
[NODE]
name                 = "TRNODE"          ; Local Node Name
description          = "Node for APPC"   ; Description of Local Node
network              = "DESAPW00"        ; Node Network Name

; ******************************************************************
; APPC Local LU Record
; ******************************************************************
[APPC_LOCAL_LU]
alias                = "LTRMRB0"         ; LU Alias
node                 = "TRNODE"          ; Local Node
description          = "Independent local LU"
                                         ; Text description of LU
net_name             = "DESAPW00"        ; LU Network Name
```

SNA Configuration for Independent LU6.2

```
LU_name                = "LTRMRB0"        ; Name of LU
LU_number              = 0                ; LU Number
session_lim            = 254              ; Session Limit
default_LU             = Yes              ; LU in pool of Default LUs
local_use              = No               ; LU can be used locally
partner_LU             = "K50, 1"         ; List of Partner LUs and Modes
partner_LU             = "X50, 1"

; ******************************************************************
; Token Ring Connection Record
; ******************************************************************
[TR_CONN]
name                   = "TRCON"          ; Name of connection
node                   = "TRNODE"         ; Name of node
description            = "Token Ring connection"
                                          ; Description
remote_end             = host             ; Remote end is host
activation             = initially        ; Initially active
node_send              = "D9D.4E7C7"      ; Node id to send
node_rcv               = ""               ; Node id to receive
control_point          = "DESAPW00.PTRMRB"; Fully qualified control point
name
remote_address         = 400072A3FFFF     ; Address of remote TR network
remote_sap             = 04               ; Remote SAP address
retry_limit            = 10               ; Retry limit
rcv_ack_limit          = 2                ; Receive acknowledgment
threshold
send_ack_limit         = 1                ; Unacknowledged send threshold
max_btu                = 2057             ; Maximum BTU length
link                   = "TOKEN"          ; link

; ******************************************************************
; APPC Mode Record
; ******************************************************************
[APPC_MODE]
name                   = "LU62INDP"       ; Mode name
mode_ID                = 1                ; Unique Mode ID
description            = "LU6.2 Independent Mode"
                                          ; Description
connection             = "TRCON"          ; Connection used by this mode
priority               = high             ; Mode is High Priority
session_limit          = 254              ; Mode Session Limit
MCW                    = 0                ; Min Conwinner Sessions
partner_MCW            = 0                ; Partner Min Conwinner
Sessions
auto_act               = 0                ; Auto activated sessions
min_sendRU             = 256              ; Min Send RU size
max_sendRU             = 2058             ; Max Send RU size
send_pace              = 4                ; Send Pacing count
min_rcvRU              = 256              ; Min Receive RU size
max_rcvRU              = 2048             ; Max Receive RU size
rcv_pace               = 4                ; Receive Pacing count
```

```
; ******************************************************************
; APPC Remote LU Record
; ******************************************************************
[APPC_REMOTE_LU]
alias                = "K50"            ; LU Alias
description          = "Remote CICS System"
                                        ; Text description of LU
net_name             = "DESAPW00"       ; LU Network Name
LU_name              = "K50"            ; Name of LU
SSCP_Alias           = "K50"            ; SSCP LU Alias
parallel_sess        = Yes              ; Parallel Sessions supported
conv_sec             = No               ; LU uses conversation level
security
session_sec          = none             ; No Session Level Security

; ******************************************************************
; APPC Remote LU Record
; ******************************************************************
[APPC_REMOTE_LU]
alias                = "X50"            ; LU Alias
description          = "Remote CICS System"
                                        ; Text description of LU
net_name             = "DESAPW00"       ; LU Network Name
LU_name              = "X50"            ; Name of LU
SSCP_Alias           = "X50"            ; SSCP LU Alias
parallel_sess        = Yes              ; Parallel Sessions supported
conv_sec             = No               ; LU uses conversation level
security
session_sec          = none             ; No Session Level Security

; ******************************************************************
; Token Ring Link Record
; ******************************************************************
[TR_LINK]
name                 = "TOKEN"          ; Name of LU
description          = "Token Ring link"; Text description of LU
device_name          = "sna_TR"         ; Name of device file for link
port_number          = 0                ; Adapter port

; ******************************************************************
; Invocable Transaction Program Record
; ******************************************************************
[INVOCABLE_TP]
alias                = "GWHSTC11"       ; TP Alias
description          = "R/2 -> R/3"     ; Text description of TP
load_method          = auto             ; TP is non-queued, dynamically
loaded
conv_sec             = No               ; TP needs user id and password
TP_type              = APPC             ; TP is an APPC TP
file                 = "/usr/sap/C11/SYS/exe/run/GWHSTC11"
                                        ; Executable file name
TP_nametype          = char             ; TP name in characters
TP_name              = "GWHSTC11"       ; Full name of TP
```

SNA Configuration for Independent LU6.2

```
parameters          = ""                ; Invocation parameters
environment         = ""                ; Invocation environment
target              = ""                ; Machine to load TP on
load_time           = 60                ; Timeout for loading TP
service_time        = 60                ; Timeout for servicing TP

; ******************************************************************
; Token Ring Link Usage Record
; ******************************************************************
[TR_USAGE]
node                = "TRNODE"          ; Node name
link                = "TOKEN"           ; Link name
incoming            = No                ; Incoming calls accepted
max_conn            = 1                 ; Maximum number of connections
local_sap           = 04                ; Local SAP address
```

IBM Workstation Configuration

The configuration on the IBM workstation is explained in the following:

SAP Configuration [Seite 246]

SNA Configuration for Dependent LU6.2 [Seite 251]

SNA Configuration for Independent LU6.2 [Seite 258]

SAP Configuration

CPI-C connections are referenced via logical destinations (symbolic destinations). These destination names can be freely chosen by the user. The allocation of these symbolic destinations to real connections with LU and TP takes place in the side-info files.

The SAP environment contains the following side info files:

XCOM	R/2 table for all connections initiated (established) from R/2.
TXCOM	R/3 table for all connections initiated (established) from R/3.
sideinfo	Unix file system file under (/usr/sap/<SID>/<INST>/data), required by the SAP gateway and possibly by external C programs as well

CUA Interface

Only one *sideinfo* file is required. No XCOM or TXCOM table.

The CUA Interface is comparable with a CPI-C connection to R/2. A destination is assigned to each R/2 system (e.g. K50). All CUA users who work in parallel must have their own destination (K50_1, K50_2, K50_3...) in the *sideinfo*. The IBM SNA-Server/6000 does not take care of the LU pooling in this case. Therefore every possible connection (destination name with _1, _2, _3...) has to be defined in the *sideinfo*. The LU pooling is taken care of by the SAP gateway. For dependent LU6.2 an LU (name of the sideinfo profile from the IBM SNA-Server/6000 configuration) must be assigned for every destination entry in the *sideinfo*.

R/2-R/3 Connections

For an R/2-R/3 connection the active partner, i.e. the partner that establishes the connection, must be identified.

Connection from R/3

If the connection is established *from the R/3 side*, then a TXCOM table and a *sideinfo* file are required in the R/3 system. Only one entry is required (without _1, _2...) in the TXCOM for each destination (R/2 to target system). In the *sideinfo* the same entries are needed as for the CUA interface. Here too a destination is required in the *sideinfo* for each connection that is to be established in parallel.

Initiating the Connection From R/2

If the connection is established *from the R/2 side*, then a XCOM table and a *sideinfo* file are required in the R/2 system. One entry for each connection is needed in the XCOM. In this case, LU is the LU name in CICS and TP is the name of the partner transaction on the UNIX side. SAP supplies the "gwhost" program for this purpose. The gwhost program is able to establish a connection to any R/3 system, according to the configuration in the *sideinfo*. However, in order to distinguish between the different connections, the gwhost program must be addressed via differing symbolic links. The name of each symbolic link should contain the name (SID) of the R/3 target system (e.g. GWHSTC11). After the gwhost program is started, it searches for the sideinfo file in the home directory of the user (user-id) under which the program was started (see local_tp-profile of the SNA-Server/6000). In the sideinfo file the program now searches for a destination having the same name as the name under which the program was called (symbolic link GWHSTC11).

Example:

1. XCOM entry with TP=GWHSTC11
2. Definition of the local_tp in SNA for GWHSTC11
3. Symbolic connection of the GWHSTC11 to /usr/sap/C11/SYS/exe/run/gwhost
4. sideinfo in the home directory of the user id that is defined under local_tp in SNA.
5. Entry in the *sideinfo* with DESTINATION=GWHSTC11

External Programs

You also have to identify the active partner in this case.

A *sideinfo* entry (e.g. K50) is needed for a connection through an external program on Unix via TCP/IP to the SAP gateway and from there via SNA to R/2. The external program uses this entry to determine the SAP gateway (GWHOST and GWSERV parameters). The SAP gateway then searches the *sideinfo* entries K50_1, K50_2, K50_3,... for the next free SNA connection to K50 (LU pooling).

A *sideinfo* entry (e.g. K50) is also needed for a connection through an external program on Unix directly via SNA to R/2. The external program determines the SNA connection (LU und TP) from this entry. There is no LU pooling.

A *sideinfo* entry (e.g. C11) is needed for a connection through an external program on Unix via TCP/IP to R/3. The external program uses this entry to determine the SAP gateway (GWHOST and GWSERV parameters). The SAP gateway then uses the same *sideinfo* entry to determine the "R/3 entry point" (Host name and dispatcher service e.g. LU=ss0007, TP=sapdp00).

A connection from R/2 via SNA directly to the external program requires an XCOM entry (e.g. EXT_IBM). This contains the LU (e.g. LU=MRB2) and the name of the external program (TP=CCPICT2S) that is to be started on the workstation.

A connection through an R/3 system via the SAP gateway to the external program requires a TXCOM entry (e.g. EXT_IBM). This entry specifies the SAP gateway (GWHOST and GWSERV parameters) that is to be started by the external program and the name of the host (LU=iw1006) on which it is to be started and the program name itself (TP=/usr/sap/C11/SYS/exe/run/ccpict2t). If the external program is not going to run on the same host as the SAP gateway, then it is started from the SAP gateway via remote shell (rsh) or rexec. Remember to check the UNIX authorizations (e.g. entries in.rhosts).

Example Sideinfo File

```
*****************************************************************
*       sideinfo  IBM-Workstation
*       Date: 15.08.95
*****************************************************************
*
*
*****************************************************************
* CUA-Interface
* Destination is R/2-System K50 CICS
* At the sapgui the destination must be entered as K50. The suffixes _1
_2 _3
* will be handeled by the SAP-Gateway automaticly (LU-pooling).
* LU=K5001 is the name of sideinfo-profile of SNA-Server/6000
*****************************************************************
DEST=K50_1
```

SAP Configuration

```
LU=K5001
TP=X1SA

DEST=K50_2
LU=K5002
TP=X1SA

DEST=K50_3
LU=K5003
TP=X1SA


*******************************************************************
* CUA-Interface
* Destination is R/2-System K50 IMS
* At the sapgui the destination must be entered as K50IMS. The suffixes
*  _1 _2 _3 will be handeled by the SAP-Gateway automaticly (LU-
pooling).
* LU=K50IMS01 is the name of sideinfo-profile of SNA-Server/6000
*******************************************************************
DEST=K50IMS_1
LU=K50IMS01
TP=K50X1SA

DEST=K50IMS_2
LU=K50IMS02
TP=K50X1SA

DEST=K50IMS_3
LU=K50IMS03
TP=K50X1SA


*******************************************************************
* R/3 -> R/2 connection (R/2 on CICS)
*
* The connection is initiated by the R/3 system.
* These entries are the same as for CUA-Interface. Normally they must
be
* defined only once and may be used for both purposes.
*******************************************************************
DEST=K50_1
LU=K5001
TP=X1SA

DEST=K50_2
LU=K5002
TP=X1SA

DEST=K50_3
LU=K5003
TP=X1SA
```

```
*****************************************************************
* R/2 -> R/3 connection (R/2 on CICS)
*
* The connection is initiated by the R/2 system.
* Via SNA a transaction program is started on the AIX-machine.
* This program searches an entry in the sideinfo with destination equal
to
* its own program name (GWHSTC11).
* The sideinfo file will be searched in the home directory of the user-
id
* configured in the local_tp profile-definition of SNA-Server.
* The program GWHSTC11 then establishes a connection to the R/3-System
defined
* by LU= (Hostname of R/3-System) and TP= (servicename of R/3-System)
via
* the SAP-Gateway defined by GWHOST= (hostname of SAP-Gateway-System)
and
* GWSERV= (servicename of SAP-Gateway).
*******************************************************************
DEST=GWHSTC11
LU=iw1006
TP=sapdp00
GWHOST=iw1006
GWSERV=sapgw00
PROTOCOL=I
CPIC_TRACE=2


*****************************************************************
* External program
* Destination is R/2-System K50 CICS
*******************************************************************
DEST=K50
LU=K5001
TP=X1SA
GWHOST=iw1006
GWSERV=sapgw00
PROTOCOL=C
CPIC_TRACE=2


*****************************************************************
* External program
* Destination is R/2-System K50 IMS
*******************************************************************
DEST=K50IMS
LU=K50IMS01
TP=K50X1SA
GWHOST=iw1006
GWSERV=sapgw00
PROTOCOL=C
CPIC_TRACE=2
```

```
*****************************************************************
* External program
* Destination is R/3-System C11
*****************************************************************
DEST=C11
LU=iw1006
TP=sapdp00
GWHOST=iw1006
GWSERV=sapgw00
PROTOCOL=I
CPIC_TRACE=2
```

Example TXCOM Entry:

```
Dest     LU        TP                Prot  Gateway-Host Gateway-Serv

K50                                  C     iw1006       sapgw00
EXT_IBM  iw1006    /usr/sap/C11/..   E     iw1006       sapgw00
```

(The full TP path is /usr/sap/C11/SYS/exe/run/ccpict2t)

Example XCOM entry:

```
Display ATAB table XCOM  Table of the symbolic destinations for CPI-C
-----------------------------------------------------------------------
--------
Symbolic Dest.      LU (Logical Unit)  TP (Transaktion prog.) Comm.Type
-----------------------------------------------------------------
C11                    MRB1               GWHSTC11
EXT_IBM                MRB2               CCPICT2S
```

SNA Configuration for Dependent LU6.2

The following example encompasses various connections involving an R/2 partner system under CICS and IMS:

1. R/3 to R/2 (CUA) under CICS
2. R/3 to R/2 (CUA) under IMS
3. R/2 to R/3 with tp=GWHSTC11 to the R/3 target system C11 (CICS)
4. R/2 to an external program with tp=CCPICT1S

Example With 3 LUs to an R/2 System

```
sna:
      prof_name                                       = "sna"
      max_sessions                                    = 200
      max_conversations                               = 200
      restart_action                                  = once
      rrm_enabled                                     = no
      dynamic_inbound_partner_lu_definitions_allowed = yes
      standard_output_device                          = "/dev/console"
      standard_error_device                           =
"/var/sna/sna.stderr"
      nmvt_action_when_no_nmvt_process                = reject
      comments                                        = ""

control_pt:
      prof_name                                       = "node_cp"
      xid_node_id                                     = "*"
      network_name                                    = "DESAPW00"
      control_pt_name_alias                           = "PTRMRB"
      control_pt_name                                 = "PTRMRB"
      control_pt_node_type                            = appn_end_node
      max_cached_trees                                = 500
      max_nodes_in_topology_database                  = 500
      route_addition_resistance                       = 128
      comments                                        = ""

local_lu_lu6.2:
      prof_name                                       = "LTRMRB1"
      local_lu_name                                   = "LTRMRB1"
      local_lu_alias                                  = "LTRMRB1"
      local_lu_dependent                              = yes
      local_lu_address                                = 1
      sscp_id                                         = *
      link_station_prof_name                          = "token"
      conversation_security_list_profile_name         = ""
      comments                                        = ""

local_lu_lu6.2:
      prof_name                                       = "LTRMRB2"
      local_lu_name                                   = "LTRMRB2"
```

```
      local_lu_alias                                  = "LTRMRB2"
      local_lu_dependent                              = yes
      local_lu_address                                = 2
      sscp_id                                         = *
      link_station_prof_name                          = "token"
      conversation_security_list_profile_name         = ""
      comments                                        = ""

local_lu_lu6.2:
      prof_name                                       = "LTRMRB3"
      local_lu_name                                   = "LTRMRB3"
      local_lu_alias                                  = "LTRMRB3"
      local_lu_dependent                              = yes
      local_lu_address                                = 3
      sscp_id                                         = *
      link_station_prof_name                          = "token"
      conversation_security_list_profile_name         = ""
      comments                                        = ""

partner_lu6.2:
      prof_name                                       = "K50-CICS"
      fq_partner_lu_name                              = "DESAPW00.K50"
      partner_lu_alias                                = "K50"
      session_security_supp                           = no
      parallel_session_supp                           = yes
      conversation_security_level                     = none
      comments                                        = ""

partner_lu6.2:
      prof_name                                       = "IMS"
      fq_partner_lu_name                              =
"DESAPW00.APPCBRDG"
      partner_lu_alias                                = "APPCBRDG"
      session_security_supp                           = no
      parallel_session_supp                           = yes
      conversation_security_level                     = none
      comments                                        = ""

side_info:
      prof_name                                       = "K5001"
      local_lu_or_control_pt_alias                    = "LTRMRB1"
      partner_lu_alias                                = "K50"
      fq_partner_lu_name                              = ""
      mode_name                                       = "LU62CPIC"
      remote_tp_name_in_hex                           = no
      remote_tp_name                                  = "X1SA"
      comments                                        = ""

side_info:
      prof_name                                       = "K5002"
      local_lu_or_control_pt_alias                    = "LTRMRB2"
      partner_lu_alias                                = "K50"
      fq_partner_lu_name                              = ""
```

```
      mode_name                                       = "LU62CPIC"
      remote_tp_name_in_hex                           = no
      remote_tp_name                                  = "X1SA"
      comments                                        = ""

side_info:
      prof_name                                       = "K5003"
      local_lu_or_control_pt_alias                    = "LTRMRB3"
      partner_lu_alias                                = "K50"
      fq_partner_lu_name                              = ""
      mode_name                                       = "LU62CPIC"
      remote_tp_name_in_hex                           = no
      remote_tp_name                                  = "X1SA"
      comments                                        = ""

side_info:
      prof_name                                       = "K50IMS01"
      local_lu_or_control_pt_alias                    = "LTRMRB1"
      partner_lu_alias                                = "APPCBRDG"
      fq_partner_lu_name                              = ""
      mode_name                                       = "LU62CPIC"
      remote_tp_name_in_hex                           = no
      remote_tp_name                                  = "K50X1SA"
      comments                                        = ""

side_info:
      prof_name                                       = "K50IMS02"
      local_lu_or_control_pt_alias                    = "LTRMRB2"
      partner_lu_alias                                = "APPCBRDG"
      fq_partner_lu_name                              = ""
      mode_name                                       = "LU62CPIC"
      remote_tp_name_in_hex                           = no
      remote_tp_name                                  = "K50X1SA"
      comments                                        = ""

side_info:
      prof_name                                       = "K50IMS03"
      local_lu_or_control_pt_alias                    = "LTRMRB3"
      partner_lu_alias                                = "APPCBRDG"
      fq_partner_lu_name                              = ""
      mode_name                                       = "LU62CPIC"
      remote_tp_name_in_hex                           = no
      remote_tp_name                                  = "K50X1SA"
      comments                                        = ""

local_tp:
      prof_name                                       = "GWHSTC11"
      tp_name                                         = "GWHSTC11"
      tp_name_in_hex                                  = no
      pip_data_present                                = no
      pip_data_subfields_number                       = 0
      conversation_type                               = either
      sync_level                                      = none/confirm
```

```
      resource_security_level                        = none
      resource_access_list_profile_name              = ""
      full_path_tp_exe                               =
"/usr/sap/C11/SYS/exe/run/GWHSTC11"
      multiple_instances                             = yes
      user_id                                        = 200
      server_synonym_name                            = ""
      restart_action                                 = once
      communication_type                             = signals
      ipc_queue_key                                  = 0
      standard_input_device                          = "/dev/console"
      standard_output_device                         = "/dev/console"
      standard_error_device                          = "/dev/console"
      comments                                       = ""

local_tp:
      prof_name                                      = "IMSASYNC"
      tp_name                                        = "IMSASYNC"
      tp_name_in_hex                                 = no
      pip_data_present                               = no
      pip_data_subfields_number                      = 0
      conversation_type                              = either
      sync_level                                     = none/confirm
      resource_security_level                        = none
      resource_access_list_profile_name              = ""
      full_path_tp_exe                               =
"/usr/sap/C11/SYS/exe/run/gwims"
      multiple_instances                             = yes
      user_id                                        = 200
      server_synonym_name                            = ""
      restart_action                                 = once
      communication_type                             = signals
      ipc_queue_key                                  = 0
      standard_input_device                          = "/dev/console"
      standard_output_device                         = "/dev/console"
      standard_error_device                          = "/dev/console"
      comments                                       = ""

local_tp:
      prof_name                                      = "CCPICT2S"
      tp_name                                        = "CCPICT2S"
      tp_name_in_hex                                 = no
      pip_data_present                               = no
      pip_data_subfields_number                      = 0
      conversation_type                              = either
      sync_level                                     = none/confirm
      resource_security_level                        = none
      resource_access_list_profile_name              = ""
      full_path_tp_exe                               =
"/usr/sap/C11/SYS/exe/run/ccpict2s"
      multiple_instances                             = yes
      user_id                                        = 200
      server_synonym_name                            = ""
```

```
      restart_action                                  = once
      communication_type                              = signals
      ipc_queue_key                                   = 0
      standard_input_device                           = "/dev/console"
      standard_output_device                          = "/dev/console"
      standard_error_device                           = "/dev/console"
      comments                                        = ""

link_station_token_ring:
      prof_name                                       = "token"
      use_control_pt_xid                              = no
      xid_node_id                                     = "*"
      sna_dlc_profile_name                            = "token"
      stop_on_inactivity                              = no
      time_out_value                                  = 0
      LU_registration_supported                       = no
      LU_registration_profile_name                    = ""
      link_tracing                                    = no
      trace_format                                    = long
      access_routing_type                             = link_address
      remote_link_name                                = ""
      remote_link_address                             = 0x400072a3ffff
      remote_sap                                      = 0x04
      verify_adjacent_node                            = no
      net_id_of_adjacent_node                         = ""
      cp_name_of_adjacent_node                        = ""
      xid_node_id_of_adjacent_node                    = "*"
      node_type_of_adjacent_node                      = learn
      solicit_sscp_sessions                           = yes
      call_out_on_activation                          = yes
      activate_link_during_system_init                = yes
      activate_link_on_demand                         = no
      cp_cp_sessions_supported                        = no
      cp_cp_session_support_required                  = no
      adjacent_node_is_preferred_server               = no
      initial_tg_number                               = 0
      restart_on_normal_deactivation                  = no
      restart_on_abnormal_deactivation                = no
      restart_on_activation                           = no
      TG_effective_capacity                           = 4300800
      TG_connect_cost_per_time                        = 0
      TG_cost_per_byte                                = 0
      TG_security                                     = nonsecure
      TG_propagation_delay                            = lan
      TG_user_defined_1                               = 128
      TG_user_defined_2                               = 128
      TG_user_defined_3                               = 128
      comments                                        = ""

sna_dlc_token_ring:
      prof_name                                       = "token"
      datalink_device_name                            = "tok0"
      force_timeout                                   = 120
```

```
      user_defined_max_i_field                        = no
      max_i_field_length                              = 30729
      max_active_link_stations                        = 100
      num_reserved_inbound_activation                 = 0
      num_reserved_outbound_activation                = 0
      transmit_window_count                           = 16
      dynamic_window_increment                        = 1
      retransmit_count                                = 8
      receive_window_count                            = 8
      priority                                        = 0
      inact_timeout                                   = 48
      response_timeout                                = 4
      acknowledgement_timeout                         = 1
      link_name                                       = ""
      local_sap                                       = 0x04
      retry_interval                                  = 60
      retry_limit                                     = 20
      dynamic_link_station_supported                  = no
      trace_base_listen_link_station                  = no
      trace_base_listen_link_station_format           = long
      dynamic_lnk_solicit_sscp_sessions               = yes
      dynamic_lnk_cp_cp_sessions_supported            = yes
      dynamic_lnk_cp_cp_session_support_required      = no
      dynamic_lnk_TG_effective_capacity               = 4300800
      dynamic_lnk_TG_connect_cost_per_time            = 0
      dynamic_lnk_TG_cost_per_byte                    = 0
      dynamic_lnk_TG_security                         = nonsecure
      dynamic_lnk_TG_propagation_delay                = lan
      dynamic_lnk_TG_user_defined_1                   = 128
      dynamic_lnk_TG_user_defined_2                   = 128
      dynamic_lnk_TG_user_defined_3                   = 128
      comments                                        = ""

mode:
      prof_name                                       = "LU62CPIC"
      mode_name                                       = "LU62CPIC"
      max_sessions                                    = 8
      min_conwinner_sessions                          = 4
      min_conloser_sessions                           = 0
      auto_activate_limit                             = 0
      max_adaptive_receive_pacing_window              = 16
      receive_pacing_window                           = 8
      max_ru_size                                     = 2048
      min_ru_size                                     = 256
      class_of_service_name                           = "#CONNECT"
      comments                                        = ""
```

SNA Configuration for Independent LU6.2

Example

```
sna:
      prof_name                                        = "sna"
      max_sessions                                     = 200
      max_conversations                                = 200
      restart_action                                   = once
      rrm_enabled                                      = no
      dynamic_inbound_partner_lu_definitions_allowed = yes
      standard_output_device                           = "/dev/console"
      standard_error_device                            =
"/var/sna/sna.stderr"
      nmvt_action_when_no_nmvt_process                 = reject
      comments                                         = ""

control_pt:
      prof_name                                        = "node_cp"
      xid_node_id                                      = "*"
      network_name                                     = "DESAPW00"
      control_pt_name_alias                            = "PTRMRB"
      control_pt_name                                  = "PTRMRB"
      control_pt_node_type                             = appn_end_node
      max_cached_trees                                 = 500
      max_nodes_in_topology_database                   = 500
      route_addition_resistance                        = 128
      comments                                         = ""

local_lu_lu6.2:
      prof_name                                        = "LTRMRB0"
      local_lu_name                                    = "LTRMRB0"
      local_lu_alias                                   = "LTRMRB0"
      local_lu_dependent                               = no
      local_lu_address                                 =
      sscp_id                                          = *
      link_station_prof_name                           = "token"
      conversation_security_list_profile_name          = ""
      comments                                         = ""

partner_lu6.2:
      prof_name                                        = "K50-CICS"
      fq_partner_lu_name                               = "DESAPW00.K50"
      partner_lu_alias                                 = "K50"
      session_security_supp                            = no
      parallel_session_supp                            = yes
      conversation_security_level                      = none
      comments                                         = ""

partner_lu6.2_location:
      prof_name                                        = "K50"
      fq_partner_lu_name                               = "DESAPW00.K50"
```

```
      fq_partner_owning_cp_name                      = "DESAPW00.SAP3"
      local_node_is_network_server_for_len_node      = no
      fq_node_server_name                            = ""
      comments                                       = ""

side_info:
      prof_name                                      = "K5000"
      local_lu_or_control_pt_alias                   = "LTRMRB0"
      partner_lu_alias                               = "K50"
      fq_partner_lu_name                             = ""
      mode_name                                      = "LU62INDP"
      remote_tp_name_in_hex                          = no
      remote_tp_name                                 = "X1SA"
      comments                                       = ""

link_station_token_ring:
      prof_name                                      = "token"
      use_control_pt_xid                             = yes
      xid_node_id                                    = "*"
      sna_dlc_profile_name                           = "token"
      stop_on_inactivity                             = no
      time_out_value                                 = 0
      LU_registration_supported                      = no
      LU_registration_profile_name                   = ""
      link_tracing                                   = no
      trace_format                                   = long
      access_routing_type                            = link_address
      remote_link_name                               = ""
      remote_link_address                            = 0x400072a3ffff
      remote_sap                                     = 0x04
      verify_adjacent_node                           = no
      net_id_of_adjacent_node                        = ""
      cp_name_of_adjacent_node                       = ""
      xid_node_id_of_adjacent_node                   = "*"
      node_type_of_adjacent_node                     = learn
      solicit_sscp_sessions                          = yes
      call_out_on_activation                         = yes
      activate_link_during_system_init               = yes
      activate_link_on_demand                        = no
      cp_cp_sessions_supported                       = no
      cp_cp_session_support_required                 = no
      adjacent_node_is_preferred_server              = no
      initial_tg_number                              = 0
      restart_on_normal_deactivation                 = no
      restart_on_abnormal_deactivation               = no
      restart_on_activation                          = no
      TG_effective_capacity                          = 4300800
      TG_connect_cost_per_time                       = 0
      TG_cost_per_byte                               = 0
      TG_security                                    = nonsecure
      TG_propagation_delay                           = lan
      TG_user_defined_1                              = 128
      TG_user_defined_2                              = 128
```

```
      TG_user_defined_3                                = 128
      comments                                         = ""

sna_dlc_token_ring:
      prof_name                                        = "token"
      datalink_device_name                             = "tok0"
      force_timeout                                    = 120
      user_defined_max_i_field                         = no
      max_i_field_length                               = 30729
      max_active_link_stations                         = 100
      num_reserved_inbound_activation                  = 0
      num_reserved_outbound_activation                 = 0
      transmit_window_count                            = 16
      dynamic_window_increment                         = 1
      retransmit_count                                 = 8
      receive_window_count                             = 8
      priority                                         = 0
      inact_timeout                                    = 48
      response_timeout                                 = 4
      acknowledgement_timeout                          = 1
      link_name                                        = ""
      local_sap                                        = 0x04
      retry_interval                                   = 60
      retry_limit                                      = 20
      dynamic_link_station_supported                   = no
      trace_base_listen_link_station                   = no
      trace_base_listen_link_station_format            = long
      dynamic_lnk_solicit_sscp_sessions                = yes
      dynamic_lnk_cp_cp_sessions_supported             = yes
      dynamic_lnk_cp_cp_session_support_required       = no
      dynamic_lnk_TG_effective_capacity                = 4300800
      dynamic_lnk_TG_connect_cost_per_time             = 0
      dynamic_lnk_TG_cost_per_byte                     = 0
      dynamic_lnk_TG_security                          = nonsecure
      dynamic_lnk_TG_propagation_delay                 = lan
      dynamic_lnk_TG_user_defined_1                    = 128
      dynamic_lnk_TG_user_defined_2                    = 128
      dynamic_lnk_TG_user_defined_3                    = 128
      comments                                         = ""

mode:
      prof_name                                        = "LU62INDP"
      mode_name                                        = "LU62INDP"
      max_sessions                                     = 8
      min_conwinner_sessions                           = 4
      min_conloser_sessions                            = 0
      auto_activate_limit                              = 0
      max_adaptive_receive_pacing_window               = 16
      receive_pacing_window                            = 8
      max_ru_size                                      = 2048
      min_ru_size                                      = 256
      class_of_service_name                            = "#CONNECT"
```

```
comments                                        = ""
```

WindowsNT Workstation Configuration

The configuration on a Windows NT workstation is explained with the help of the following examples:

SAP Configuration [Seite 263]

SNA Configuration for Dependent LU6.2 [Seite 266]

SNA Configuration for Independent LU6.2 [Seite 267]

SAP Configuration

CUA Interface

Not yet available.

R/2 - R/3 Connections

Not yet available.

External Programs

Not yet available.

Example Sideinfo:

```
*******************************************************************
*       sideinfo  NT SNA Server using an independent LU 6.2
*       Date: 31.10.95
*******************************************************************
*
*
*******************************************************************
* CUA-Interface
* Destination is R/2-System K50 CICS
* At the sapgui the destination must be entered as K50.
* LU=K50 is the name of the remote APPC LU which is partnered to the
* LOCAL APPC LU LOCAL_LU=LTRMBR0 using the LOGMODE MODE_NAME=LU62INDP
*******************************************************************
DEST=K50
LU=K50
TP=X1SA
GWHOST=p08624
GWSERV=sapgw44
LOCAL_LU=LTRMBR0
MODE_NAME=LU62INDP
PROTOCOL=C

*******************************************************************
* R/3 -> R/2 connection (R/2 on CICS)
*
* The connection is initiated by the R/3 system.
* This entry is the same as for the CUA-Interface. Usually it must
* be defined only once and may be used for both purposes.
*******************************************************************
DEST=K50
LU=K50
```

SAP Configuration

```
TP=X1SA
GWHOST=p08624
GWSERV=sapgw44
LOCAL_LU=LTRMBR0
MODE_NAME=LU62INDP
PROTOCOL=C

*****************************************************************
* R/2 -> R/3 connection (R/2 on CICS)
*
* The connection is initiated by the R/2 system.
* Via the SNA server a transaction program is started on the NT-
machine.
* This program is a copy of gwhost.exe (found in the executables
directory)
* it searches an entry in the sideinfo with destination equal to its
own
* program name (GWHSTC11). - Use the copy command to create
GWHOSTC11.exe
* The sideinfo file described using the system environment variable
SIDE_INFO
+ will be used.
* The program GWHSTC11 then establishes a connection to the R/3-System
defined
* by LU= (Hostname of R/3-System) and TP= (servicename of R/3-System)
via
* the SAP-Gateway defined by GWHOST= (hostname of SAP-Gateway-System)
and
* GWSERV= (servicename of SAP-Gateway).
*****************************************************************
DEST=GWHSTC11
LU=ss0007
TP=sapdp00
GWHOST=p08624
GWSERV=sapgw44
PROTOCOL=I
CPIC_TRACE=2

*****************************************************************
* External program
* Destination is R/2-System K50 CICS
*****************************************************************
DEST=K50
LU=K50
TP=X1SA
GWHOST=p08624
GWSERV=sapgw44
LOCAL_LU=LTRMBR0
MODE_NAME=LU62INDP
PROTOCOL=C
CPIC_TRACE=2

*****************************************************************
```

```
* External program
* Destination is R/2-System K50 IMS
*****************************************************************
DEST=K50IMS
LU=K50IMS01
TP=K50X1SA
GWHOST=p08624
GWSERV=sapgw44
PROTOCOL=C
CPIC_TRACE=2


*****************************************************************
* External program
* Destination is R/3-System C11
*****************************************************************
DEST=C11
LU=ss0007
TP=sapdp00
GWHOST=p08624
GWSERV=sapgw44
PROTOCOL=I
CPIC_TRACE=2
```

Example TXCOM Entry:

```
Dest     LU        TP                Prot  Gateway-Host Gateway-Serv

K50                                  C     p08624       sapgw00
EXT_NT   p08624    /usr/sap/C11/..   E     p08624       sapgw00
```

(The full TP path is /usr/sap/C11/SYS/exe/run/ccpict2t)

Example XCOM entry:

```
Display ATAB table XCOM  Table of the symbolic destinations for CPI-C
-----------------------------------------------------------------------
--------
Symbolic Dest.      LU (Logical Unit)  TP (Transaktion prog.) Comm.Type
-------------------------------------------------------------------
C11                     MRB0               GWHSTC11
EXT_NT                  MRB0               CCPICT2S
```

SNA Configuration for Dependent LU6.2

Since LU pooling is not supported, we recommend that you do **not** use dependent LU6.2.

SNA Configuration for Independent LU6.2

Example

```
MODE SNASVCMG

  Mode Name                 SNASVCMG
  Comment                   indep. LU TEST
  Session Limit             2
  Min Con Winners           1
  Min Con Losers            1
  Autoactivation Lim        1
  Enable Autopartner        No
  High Priority             Yes
  Pacing Send Count         0
  Pacing Recv Count         0
  Max Send RU               256
  Max Receive RU            256


MODE LU62INDP

  Mode Name                 LU62INDP
  Comment                   indep. LU TEST
  Session Limit             200
  Min Con Winners           100
  Min Con Losers            100
  Autoactivation Lim        0
  Enable Autopartner        No
  High Priority             Yes
  Pacing Send Count         8
  Pacing Recv Count         8
  Max Send RU               2048
  Max Receive RU            2048


SERVER P08624

  Server Name           P08624
  Comment               QSA_NT SNA Server
  Control Point Name    PTRMRB
  Network Name          DESAPW00

  Link Services associated with this Server:
    SNADLC1      SnaDlc1

  Connections associated with this Server:
    TOKEN1       802.2 Connection

  APPC Local LUs associated with this Server:
    LTRMBR0
```

```
LINK SNADLC1

CONNECTION TOKEN1

  Connection Name            TOKEN1
  Server Name                P08624
  Comment                    802.2 Connection
  Remote End                 Host
  Activation type            Initially Active
  Local Block Number         D9D
  Local Node Number          4E7C2
  Control Point Name         SAP3
  Network Name               DESAPW00
  Remote Block Number
  Remote Node Number

  Primary Link Service       SNADLC1

  Connection Type            802.2 DLC
  DLC Type                   Token
  XID Format                 Format3
  Remote Network Address     400072A3FFFF
  Remote SAP Address         4
  Max BTU Length             1929
  Receive ACK Threshold      2
  NAK Send Limit             1
  Retry Limit                10
  XID Retry Limit            3
  T1 Timeout                 Default
  T2 Timeout                 Default
  Ti Timeout                 Default

  No 3270 LUs assigned to this Connection.

  No LUA LUs assigned to this Connection.

  No Downstream LUs assigned to this Connection.

  APPC LUs assigned to this Connection:
    K50


APPCRLU K50

  LU Alias                 K50
  Connection Name          TOKEN1
  Network Name             DESAPW00
  LU Name                  K50
  Uninterpreted LU Name    K50
  Comment
  Parallel sessions        Yes
  Automatic partnering     Yes
```

```
  Session level security   None
  Implicit Mode            LU62TEST

  Partner LUs and modes:
  LTRMBR0     SNASVCMG
  LTRMBR0     LU62INDP

APPCLLU LTRMBR0

  LU Alias                 LTRMBR0
  Server Name              P08624
  Independent LU           Yes
  Network Name             DESAPW00
  LU Name                  LTRMRB0
  Comment
  Automatic partnering     Yes
  Member of def. pool      Yes
  Implicit remote LU       K50
  Timeout for TP start     60

  Partner LUs:
  K50         SNASVCMG    TOKEN1
  K50         LU62INDP    TOKEN1
```

OS/2 Workstation Configuration

The configuration on an OS/2 workstation is explained with the help of the following examples:

SAP Configuration [Seite 271]

SNA Configuration for Dependent LU6.2 [Seite 274]

SNA Configuration for Independent LU6.2 [Seite 278]

SAP Configuration

CPI-C connections are referenced via logical destinations (symbolic destinations). These destination names can be selected by the user. The assignment of these symbolic destinations to the actual connections with LU and TP is made in the side info file.

The SAP environment contains the following side info files:

XCOM	An R/2 table for all connections initiated on the R/2 side.
sideinfo	An OS/2 file system file (normally found in D:\SAP\GW\sideinfo) that is required by the SAP gateway and from any external C-programs.

CUA Interface

Only the *sideinfo* table is required. The CUA Interface is comparable with a CPI-C connection to R/2. A destination is assigned to each R/2 system (e.g. K50). One exception to this occurs when IMS is employed instead of the CICS communications sub-system. In this case the LU6.1 Adapter (e.g. APPCBRDG) is allocated as destination. Specifying the start transaction xxxX1SA controls the choice of SAP system to be used.

A destination can be explicitly specified for each user in the *sideinfo*, but the LU pooling can also be used. The CM/2 Communications Manager supports this. In the *sideinfo* the local LU has to be identified with the following entry:

Local_LU=*

If no entry is maintained in the *sideinfo* for the local LU, then the default LU is automatically used. This has to be specified in the configuration. Working in this way makes sense only with independent LU.

R/2-R/3 Connections

R/2-R/3 connections are not supported on OS/2.

External Programs

The active partner must be identified. A *sideinfo* entry is needed for establishing a connection from the external program via SNA to R/2.

Initiating the Connection From R/2

An entry in the XCOM table is required if the connection is to be established from R/2 via SNA directly to an external program on the workstation. This contains the LU name as defined in CICS (terminal ID) and the name of the external program that is to be started on the workstation. There must also be a corresponding definition for this program in the Communications Manager Profile under the TRANSACTIONS PROGRAMS heading.

Example Sideinfo File

```
**********************
* SAP CPI-C SideInfo *
**********************
*
*--------------
* SAP R/2 K50
*--------------
```

SAP Configuration

```
*
DEST=K50
PROTOCOL=C
LOCAL_LU=*
LU=K50
TP=X1SA
MODE_NAME=LU62CPIC
CPIC_TRACE=1
*KEEP_SESSION=1
*
*----------------
* SAP R/2 BS2000
*----------------
DEST=S50
GWHOST=sb0002
GWSERV=sapgw01
PROTOCOL=C
LU=S50
TP=X1SA
CPIC_TRACE=1
*
*--------------
* SAP R/2 IMS
*--------------
DEST=K50IMS
PROTOCOL=C
LU=APPCBRDG
LOCAL_LU=LTRMRB2
MODE_NAME=LU62APPC
TP=K50X1SA
CPIC_TRACE=1
*
DEST=APPCBRDG
PROTOCOL=C
LU=APPCBRDG
LOCAL_LU=LTRMRB3
MODE_NAME=LU62APPC
TP=K50X2SA
CPIC_TRACE=1
*
*---------------
* SAP C-TestPGMe
*---------------
DEST=rcvdata1
GWHOST=p04308
GWSERV=sapgw00
PROTOCOL=E
LU=p04308
TP=rcvdata1
CPIC_TRACE=3
```

Example TXCOM Entry:

Not applicable, since the OS/2 gateway does not support connections from R/3.

Example XCOM entry:

```
 Display ATAB table XCOM  Table of the symbolic destinations for CPI-C
-------------------------------------------------------------------
 Symbolische Dest.      LU (Logical Unit)  TP (Transaktion prog.)
Comm.Type
-------------------------------------------------------------------
 SCHULTZD    FSIFACE    MRB3               FSIFACE
 SCHULTZKH   GRAPHICS   MRB2               IMSASYNC
 EXT_IBM                MRB3               CCPICPT2S
```

SNA Configuration for Dependent LU6.2

Example With 3 LUs to an R/2 System

```
DEFINE_LOCAL_CP  FQ_CP_NAME(DESAPW00.PTRMRB)
                   DESCRIPTION(Created on 15.10.95 at 12.18)
                   CP_ALIAS(PTRMRB)
                   NAU_ADDRESS(INDEPENDENT_LU)
                   NODE_TYPE(EN)
                   NODE_ID(X'05D00002')
                   NW_FP_SUPPORT(NONE)
                   HOST_FP_SUPPORT(YES)
                   MAX_COMP_LEVEL(NONE)
                   MAX_COMP_TOKENS(0);

  DEFINE_LOGICAL_LINK  LINK_NAME(LINK0001)
                       DESCRIPTION(Created on 15.10.95 at 12.18)
                       FQ_ADJACENT_CP_NAME(DESAPW00.SAP   )
                       ADJACENT_NODE_TYPE(LEN)
                       DLC_NAME(IBMTRNET)
                       ADAPTER_NUMBER(0)
                       DESTINATION_ADDRESS(X'40003104FFFF')
                       ETHERNET_FORMAT(NO)
                       CP_CP_SESSION_SUPPORT(NO)
                       SOLICIT_SSCP_SESSION(YES)
                       NODE_ID(X'05D00002')
                       ACTIVATE_AT_STARTUP(YES)
                       USE_PUNAME_AS_CPNAME(NO)
                       LIMITED_RESOURCE(USE_ADAPTER_DEFINITION)
                       LINK_STATION_ROLE(USE_ADAPTER_DEFINITION)
                       MAX_ACTIVATION_ATTEMPTS(USE_ADAPTER_DEFINITION)
                       EFFECTIVE_CAPACITY(USE_ADAPTER_DEFINITION)
                       COST_PER_CONNECT_TIME(USE_ADAPTER_DEFINITION)
                       COST_PER_BYTE(USE_ADAPTER_DEFINITION)
                       SECURITY(USE_ADAPTER_DEFINITION)
                       PROPAGATION_DELAY(USE_ADAPTER_DEFINITION)
                       USER_DEFINED_1(USE_ADAPTER_DEFINITION)
                       USER_DEFINED_2(USE_ADAPTER_DEFINITION)
                       USER_DEFINED_3(USE_ADAPTER_DEFINITION);

  DEFINE_LOCAL_LU  LU_NAME(LTRMRB1)
                   DESCRIPTION(Created on 15.10.95 at 12.18)
                   LU_ALIAS(LTRMRB1)
                   HOST_LINK_NAME(HOST0001)
                   NAU_ADDRESS(1);

  DEFINE_LOCAL_LU  LU_NAME(LTRMRB2)
                   DESCRIPTION(Created on 15.10.95 at 12.18)
                   LU_ALIAS(LTRMRB2)
                   HOST_LINK_NAME(HOST0001)
                   NAU_ADDRESS(2);
```

```
  DEFINE_LOCAL_LU  LU_NAME(LTRMRB3)
                   LU_ALIAS(LTRMRB3)
                   HOST_LINK_NAME(HOST0001)
                   NAU_ADDRESS(3);

  DEFINE_PARTNER_LU  FQ_PARTNER_LU_NAME(APPCBRDG       )
                     DESCRIPTION(Created on 15.10.95 at 12.18)
                     PARTNER_LU_ALIAS(APPCBRDG)
                     PARTNER_LU_UNINTERPRETED_NAME(APPCBRDG)
                     MAX_MC_LL_SEND_SIZE(32767)
                     CONV_SECURITY_VERIFICATION(NO)
                     PARALLEL_SESSION_SUPPORT(NO);

  DEFINE_PARTNER_LU  FQ_PARTNER_LU_NAME(DESAPW00.K50   )
                     DESCRIPTION(Created on 15.10.95 at 12.18)
                     PARTNER_LU_ALIAS(K50)
                     PARTNER_LU_UNINTERPRETED_NAME(K50)
                     MAX_MC_LL_SEND_SIZE(32767)
                     CONV_SECURITY_VERIFICATION(NO)
                     PARALLEL_SESSION_SUPPORT(NO);


  DEFINE_PARTNER_LU_LOCATION  FQ_PARTNER_LU_NAME(APPCBRDG       )
                              DESCRIPTION(Created on 15.10.95 at 12.18)
                              WILDCARD_ENTRY(NO)
                              FQ_OWNING_CP_NAME(DESAPW00.SAP   )
                              LOCAL_NODE_NN_SERVER(NO);

  DEFINE_PARTNER_LU_LOCATION  FQ_PARTNER_LU_NAME(DESAPW00.K50   )
                              DESCRIPTION(Created on 15.10.95 at 12.18)
                              WILDCARD_ENTRY(NO)
                              FQ_OWNING_CP_NAME(DESAPW00.SAP   )
                              LOCAL_NODE_NN_SERVER(NO);

DEFINE_MODE  MODE_NAME(LU62CPIC)
               DESCRIPTION(Created on 22.10.95 at 12.18)
               COS_NAME(#CONNECT)
               DEFAULT_RU_SIZE(NO)
               MAX_RU_SIZE_UPPER_BOUND(256)
               RECEIVE_PACING_WINDOW(63)
               MAX_NEGOTIABLE_SESSION_LIMIT(1)
               PLU_MODE_SESSION_LIMIT(1)
               MIN_CONWINNERS_SOURCE(0)
               COMPRESSION_NEED(PROHIBITED)
               PLU_SLU_COMPRESSION(NONE)
               SLU_PLU_COMPRESSION(NONE);

DEFINE_MODE  MODE_NAME(LU62TST1)
               DESCRIPTION(Created on 15.10.95 at 12.18)
               COS_NAME(#CONNECT)
               DEFAULT_RU_SIZE(NO)
               MAX_RU_SIZE_UPPER_BOUND(256)
               RECEIVE_PACING_WINDOW(63)
```

```
                MAX_NEGOTIABLE_SESSION_LIMIT(1)
                PLU_MODE_SESSION_LIMIT(1)
                MIN_CONWINNERS_SOURCE(0)
                COMPRESSION_NEED(PROHIBITED)
                PLU_SLU_COMPRESSION(NONE)
                SLU_PLU_COMPRESSION(NONE);

  DEFINE_MODE   MODE_NAME(LU62APPC)
                DESCRIPTION(Created on 15.10.95 at 12.18)
                COS_NAME(#CONNECT)
                DEFAULT_RU_SIZE(NO)
                MAX_RU_SIZE_UPPER_BOUND(256)
                RECEIVE_PACING_WINDOW(4)
                MAX_NEGOTIABLE_SESSION_LIMIT(32767)
                PLU_MODE_SESSION_LIMIT(1)
                MIN_CONWINNERS_SOURCE(1)
                COMPRESSION_NEED(PROHIBITED)
                PLU_SLU_COMPRESSION(NONE)
                SLU_PLU_COMPRESSION(NONE);

 DEFINE_DEFAULTS  IMPLICIT_INBOUND_PLU_SUPPORT(YES)
                  DESCRIPTION(Created on 15.10.95 at 16.30
                  DEFAULT_MODE_NAME(BLANK)
                  DEFAULT_LOCAL_LU_ALIAS(LTRMRB1)
                  MAX_MC_LL_SEND_SIZE(32767)
                  DIRECTORY_FOR_INBOUND_ATTACHES(*)
                  DEFAULT_TP_OPERATION(NONQUEUED_AM_STARTE
                  DEFAULT_TP_PROGRAM_TYPE(BACKGROUND)
                  DEFAULT_TP_CONV_SECURITY_RQD(NO)
                  MAX_HELD_ALERTS(10);

 DEFINE_TP  TP_NAME(RCVDATA)
             PIP_ALLOWED(NO)
             FILESPEC(e:\SAPGUI\GW\rcvdata.exe)
             CONVERSATION_TYPE(EITHER)
             CONV_SECURITY_RQD(NO)
             SYNC_LEVEL(EITHER)
             TP_OPERATION(QUEUED_AM_STARTED)
             PROGRAM_TYPE(VIO_WINDOWABLE)
             INCOMING_ALLOCATE_QUEUE_DEPTH(255)
             INCOMING_ALLOCATE_TIMEOUT(INFINITE)
             RECEIVE_ALLOCATE_TIMEOUT(INFINITE);

DEFINE_TP  TP_NAME(IMSASYNC)
             DESCRIPTION(Created on 15.10.95 at 12.18)
             PIP_ALLOWED(NO)
             FILESPEC(D:\SAP_WS\GRAPHIC\IMSASYNC.EXE)
             CONVERSATION_TYPE(MAPPED)
             CONV_SECURITY_RQD(NO)
             SYNC_LEVEL(EITHER)
             TP_OPERATION(NONQUEUED_AM_STARTED)
             PROGRAM_TYPE(PRESENTATION_MANAGER)
             RECEIVE_ALLOCATE_TIMEOUT(INFINITE);
```

```
START_ATTACH_MANAGER;
```

SNA Configuration for Independent LU6.2

Example

```
DEFINE_LOCAL_CP  FQ_CP_NAME(DESAPW00.LTRMP3)
                   DESCRIPTION(Created on 15.10.95 at 16.30)
                   CP_ALIAS(LTRMP3)
                   NAU_ADDRESS(INDEPENDENT_LU)
                   NODE_TYPE(EN)
                   NODE_ID(X'D9D4D7F3')
                   NW_FP_SUPPORT(NONE)
                   HOST_FP_SUPPORT(YES)
                   HOST_FP_LINK_NAME(HOST0001)
                   MAX_COMP_LEVEL(NONE)
                   MAX_COMP_TOKENS(0);

  DEFINE_LOGICAL_LINK  LINK_NAME(HOST0001)
                       FQ_ADJACENT_CP_NAME(DESAPW00.SAP3  )
                       ADJACENT_NODE_TYPE(LEN)
                       DLC_NAME(IBMTRNET)
                       ADAPTER_NUMBER(0)
                       DESTINATION_ADDRESS(X'400072A3FFFF04')
                       ETHERNET_FORMAT(NO)
                       CP_CP_SESSION_SUPPORT(NO)
                       SOLICIT_SSCP_SESSION(YES)
                       NODE_ID(X'D9D4D7F3')
                       ACTIVATE_AT_STARTUP(YES)
                       USE_PUNAME_AS_CPNAME(YES)
                       LIMITED_RESOURCE(USE_ADAPTER_DEFINITION)
                       LINK_STATION_ROLE(USE_ADAPTER_DEFINITION)
                       MAX_ACTIVATION_ATTEMPTS(USE_ADAPTER_DEFINITION)
                       EFFECTIVE_CAPACITY(USE_ADAPTER_DEFINITION)
                       COST_PER_CONNECT_TIME(USE_ADAPTER_DEFINITION)
                       COST_PER_BYTE(USE_ADAPTER_DEFINITION)
                       SECURITY(USE_ADAPTER_DEFINITION)
                       PROPAGATION_DELAY(USE_ADAPTER_DEFINITION)
                       USER_DEFINED_1(USE_ADAPTER_DEFINITION)
                       USER_DEFINED_2(USE_ADAPTER_DEFINITION)
                       USER_DEFINED_3(USE_ADAPTER_DEFINITION);

  DEFINE_LOCAL_LU  LU_NAME(LTRMP30)
                   DESCRIPTION(LU@00)
                   LU_ALIAS(LU@00 )
                   NAU_ADDRESS(INDEPENDENT_LU);

  DEFINE_LOCAL_LU  LU_NAME(LTRMP32)
                   DESCRIPTION(LU@02)
                   LU_ALIAS(LU@02 )
                   HOST_LINK_NAME(HOST0001)
                   NAU_ADDRESS(2);

  DEFINE_LOCAL_LU  LU_NAME(LTRMP33)
```

```
                 LU_ALIAS(LU@03 )
                 HOST_LINK_NAME(HOST0001)
                 NAU_ADDRESS(3);

DEFINE_PARTNER_LU  FQ_PARTNER_LU_NAME(DESAPW00.K50   )
                   PARTNER_LU_ALIAS(K50)
                   PARTNER_LU_UNINTERPRETED_NAME(K50   )
                   MAX_MC_LL_SEND_SIZE(32767)
                   CONV_SECURITY_VERIFICATION(NO)
                   PARALLEL_SESSION_SUPPORT(YES);

DEFINE_PARTNER_LU  FQ_PARTNER_LU_NAME(DESAPW00.IMSAPPC)
                   PARTNER_LU_ALIAS(IMSAPPC)
                   PARTNER_LU_UNINTERPRETED_NAME(IMSAPPC)
                   MAX_MC_LL_SEND_SIZE(32767)
                   CONV_SECURITY_VERIFICATION(NO)
                   PARALLEL_SESSION_SUPPORT(YES);

DEFINE_PARTNER_LU_LOCATION  FQ_PARTNER_LU_NAME(DESAPW00.K50   )
                            WILDCARD_ENTRY(NO)
                            FQ_OWNING_CP_NAME(DESAPW00.SAP3  )
                            LOCAL_NODE_NN_SERVER(NO);

DEFINE_PARTNER_LU_LOCATION  FQ_PARTNER_LU_NAME(DESAPW00.IMSAPPC)
                            WILDCARD_ENTRY(NO)
                            FQ_OWNING_CP_NAME(DESAPW00.SAP3  )
                            LOCAL_NODE_NN_SERVER(NO);

DEFINE_MODE  MODE_NAME(LU62TST1)
             COS_NAME(#CONNECT)
             DEFAULT_RU_SIZE(YES)
             RECEIVE_PACING_WINDOW(0)
             MAX_NEGOTIABLE_SESSION_LIMIT(32767)
             PLU_MODE_SESSION_LIMIT(1)
             MIN_CONWINNERS_SOURCE(1)
             COMPRESSION_NEED(PROHIBITED)
             PLU_SLU_COMPRESSION(NONE)
             SLU_PLU_COMPRESSION(NONE);

DEFINE_MODE  MODE_NAME(LU62APPC)
             COS_NAME(#CONNECT)
             DEFAULT_RU_SIZE(YES)
             RECEIVE_PACING_WINDOW(8)
             MAX_NEGOTIABLE_SESSION_LIMIT(32767)
             PLU_MODE_SESSION_LIMIT(1)
             MIN_CONWINNERS_SOURCE(1)
             COMPRESSION_NEED(PROHIBITED)
             PLU_SLU_COMPRESSION(NONE)
             SLU_PLU_COMPRESSION(NONE);

DEFINE_MODE  MODE_NAME(LU62TEST)
             COS_NAME(#CONNECT)
             DEFAULT_RU_SIZE(NO)
```

```
              MAX_RU_SIZE_UPPER_BOUND(2048)
              RECEIVE_PACING_WINDOW(0)
              MAX_NEGOTIABLE_SESSION_LIMIT(32767)
              PLU_MODE_SESSION_LIMIT(10)
              MIN_CONWINNERS_SOURCE(5)
              COMPRESSION_NEED(PROHIBITED)
              PLU_SLU_COMPRESSION(NONE)
              SLU_PLU_COMPRESSION(NONE);

DEFINE_MODE   MODE_NAME(LU62TSTP)
              COS_NAME(#CONNECT)
              DEFAULT_RU_SIZE(NO)
              MAX_RU_SIZE_UPPER_BOUND(4096)
              RECEIVE_PACING_WINDOW(8)
              MAX_NEGOTIABLE_SESSION_LIMIT(32767)
              PLU_MODE_SESSION_LIMIT(6)
              MIN_CONWINNERS_SOURCE(3)
              COMPRESSION_NEED(PROHIBITED)
              PLU_SLU_COMPRESSION(NONE)
              SLU_PLU_COMPRESSION(NONE);

DEFINE_DEFAULTS  IMPLICIT_INBOUND_PLU_SUPPORT(YES)
                 DESCRIPTION(Created on 10.04.92 at 16.30)
                 DEFAULT_MODE_NAME(BLANK)
                 DEFAULT_LOCAL_LU_ALIAS(LU@00 )
                 MAX_MC_LL_SEND_SIZE(32767)
                 DIRECTORY_FOR_INBOUND_ATTACHES(*)
                 DEFAULT_TP_OPERATION(NONQUEUED_AM_STARTED)
                 DEFAULT_TP_PROGRAM_TYPE(VIO_WINDOWABLE)
                 DEFAULT_TP_CONV_SECURITY_RQD(NO)
                 MAX_HELD_ALERTS(10);


DEFINE_TP  TP_NAME(RCVDATA)
           PIP_ALLOWED(NO)
           FILESPEC(e:\work\appc\sap\rcvdata.exe)
           CONVERSATION_TYPE(EITHER)
           CONV_SECURITY_RQD(NO)
           SYNC_LEVEL(EITHER)
           TP_OPERATION(QUEUED_AM_STARTED)
           PROGRAM_TYPE(VIO_WINDOWABLE)
           INCOMING_ALLOCATE_QUEUE_DEPTH(255)
           INCOMING_ALLOCATE_TIMEOUT(INFINITE)
           RECEIVE_ALLOCATE_TIMEOUT(INFINITE);

DEFINE_TP  TP_NAME(IMSASYNC)
           PIP_ALLOWED(NO)
           FILESPEC(E:\WORK\APPC\SAP\IMSASYNC.EXE)
           CONVERSATION_TYPE(EITHER)
           CONV_SECURITY_RQD(NO)
           SYNC_LEVEL(EITHER)
           TP_OPERATION(QUEUED_AM_STARTED)
           PROGRAM_TYPE(VIO_WINDOWABLE)
```

```
            INCOMING_ALLOCATE_QUEUE_DEPTH(255)
            INCOMING_ALLOCATE_TIMEOUT(INFINITE)
            RECEIVE_ALLOCATE_TIMEOUT(INFINITE);


START_ATTACH_MANAGER;
```

SNI Workstation Configuration

The configuration on an SNI workstation is explained with the help of the following examples:

SAP Configuration [Seite 283]

SNA Configuration for Dependent LU6.2 [Seite 286]

SNA Configuration for Independent LU6.2 [Seite 289]

SAP Configuration

The CPI-C interface of Transit is used for SNI Transit SNA. This means that a sideinfo file is not needed for the SAP gateway. The destinations are defined in the Transit configuration (KOGS).

CUA Interface

Not yet available.

R/2-R/3 Connections

Not yet available.

External Programs

Not yet available.

Example Sideinfo File

```
*******************************************************************
*     sideinfo SNI-Workstation
*     Date: 15.08.95
*******************************************************************
*
*
*******************************************************************
* R/2 -> R/3 connection (R/2 on CICS)
*
* The connection is initiated by the R/2 system.
* Via SNA a transaction program is started on the SINIX-machine.
* This program searches an entry in the sideinfo with destination equal
to
* its own program name (GWHSTC11).
* The sideinfo file will be searched in the home directory of the user-
id
* configured in the TRANSIT-configuration (XTP-Macro).
* The program GWHSTC11 then establishes a connection to the R/3-System
defined
* by LU= (Hostname of R/3-System) and TP= (servicename of R/3-System)
via
* the SAP-Gateway defined by GWHOST= (hostname of SAP-Gateway-System)
and
* GWSERV= (servicename of SAP-Gateway).
*******************************************************************
DEST=GWHSTC11
GWHOST=ss0007
GWSERV=sapgw00
LU=ss0007
TP=sapdp00
```

SAP Configuration

```
PROTOCOL=I
CPIC_TRACE=2

*****************************************************************
* External program
* Destination is R/2-System K50 (CICS)
*****************************************************************
DEST=K50
GWHOST=ss0007
GWSERV=sapgw00
PROTOCOL=C
CPIC_TRACE=2

*****************************************************************
* External program
* Destination is R/2-System K50 (IMS)
*****************************************************************
DEST=K50IMS
GWHOST=ss0007
GWSERV=sapgw00
PROTOCOL=C
CPIC_TRACE=2

*****************************************************************
* External program
* Destination is R/3-System C11
*****************************************************************
DEST=C11
GWHOST=ss0007
GWSERV=sapgw00
LU=ss0007
TP=sapdp00
PROTOCOL=I
CPIC_TRACE=2
```

Example TXCOM Entry:

```
Dest     LU        TP                Prot  Gateway-Host Gateway-Serv

 K50                                  C     ss0007       sapgw00
 EXT_SNI  ss0007    /usr/sap/C11/..   E     ss0007       sapgw00
```

Example XCOM entry:

```
Maintain table ATAB   XCOM  table of the symbolic destinations for CPI-
C
-------------------------------------------------------------------
Symbolic Dest.      LU (Logical Unit)  TP (Transaction prog.) Comm.Type
-------------------------------------------------------------------
C11                     MRB1               GWHSTC11
EXT_SNI                 MRB2               CCPICT2S
```

SNA Configuration for Dependent LU6.2

Example With 3 LUs to an R/2 System

```
# @!ha: Sample configuration with dependent LU              09.11.95
XLINK     DESAPW00,
                    ACT         = AUTO,
                    TYP         = LAN,
                    XID         = 00000000,
                    CPNAME      = PTRMRB,
                    CONFSTR     = /opt/lib/llc2/conf.str,
                    DEVICE      = tr0,
                    SSAP        = 04
 XPU       HOST3090,
                    TYP         = PEER,
                    CONNECT     = AUTO,
                    DISCNT      = MAN,
                    LINK        = DESAPW00,
                    MAXDATA     = 265,
                    DMAC        = 400072A3FFFF,
                    DSAP        = 04
 XLU       LTRMRB1,
                    TYP         = 6,
                    LOCADDR     = 1,
                    SESS-CTR    = DEP,
                    NETNAME     = LTRMRB1,
                    PAIR        = K50CICS LU62CPIC,
                    PAIR        = IMS LU62CPIC
 XLU       LTRMRB2,
                    TYP         = 6,
                    LOCADDR     = 2,
                    SESS-CTR    = DEP,
                    NETNAME     = LTRMRB2,
                    PAIR        = K50CICS LU62CPIC,
                    PAIR        = IMS LU62CPIC

 XLU       LTRMRB3,
                    TYP         = 6,
                    LOCADDR     = 3,
                    SESS-CTR    = DEP,
                    NETNAME     = LTRMRB3,
                    PAIR        = K50CICS LU62CPIC,
                    PAIR        = IMS LU62CPIC


* Partner application

 XRLU      K50CICS,
                    NETNAME     = DESAPW00.X50,
                    PU          = HOST3090

 XRLU      IMS,
```

```
                    NETNAME     = DESAPW00.APPCBRDG,
                    PU          = HOST3090

* LOGMODE

 XMODE     LU62CPIC,
                SESS-MAX    = 1,
                    SESS-LOS    = 0,
                    SESS-WIN    = 0,
                    SESS-AUTO   = 0,
                    PAC-SEND    = 8,
                    PAC-RCV     = 8,
                SRU-MAX     = 88,
                RRU-MAX     = 88

* Local partner program for connection from R/2

 XTP       GWHSTC11,
                    PATH      = /usr/sap/C11/SYS/exe/run/GWHSTC11,
                    UID       = cuaadm,
                    TYP       = USER,
                    SECURE    = NO

 XTP       CCPICT2S,
                    PATH      = /usr/sap/C11/SYS/exe/run/ccpict2s,
                    UID       = cuaadm,
                    TYP       = USER,
                    SECURE    = NO

 XTP       IMSASYNC,
                    PATH      = /usr/sap/C11/SYS/exe/run/gwims,
                    UID       = cuaadm,
                    TYP       = USER,
                    SECURE    = NO


* Side-Info data

 XSYMDEST  K50,
                    RLU         = K50CICS,
                    MODE        = LU62CPIC,
                    TP          = X1SA,
                    TP-TYP      = USER,
                    SEC-TYP     = NONE

 XSYMDEST  K50IMS,
                    RLU         = IMS,
                    MODE        = LU62CPIC,
                    TP          = K50X1SA,
                    TP-TYP      = USER,
                    SEC-TYP     = NONE
```

```
XEND
```

SNA Configuration for Independent LU6.2

Example

```
# @!ha: Example configuration with independent LU            09.11.95
 XLINK     DESAPW00,
                   ACT         = AUTO,
                   TYP         = LAN,
                   XID         = 00000000,
                   CPNAME      = PTRMRB,
                   CONFSTR     = /opt/lib/llc2/conf.str,
                   DEVICE      = tr0,
                   SSAP        = 04
 XPU       HOST3090,
                   TYP         = PEER,
                   CONNECT     = AUTO,
                   DISCNT      = MAN,
                   LINK        = DESAPW00,
                   MAXDATA     = 265,
                   DMAC        = 400072A3FFFF,
                   DSAP        = 04
 XLU       LTRMRB0,
                   TYP         = 6,
                   SESS-CTR    = IND,
                   NETNAME     = LTRMRB0,
                   SESS-LMT    = 200,
               PAIR    = K50CICS LU62INDP

* Partner application

 XRLU      K50CICS,
                   NETNAME     = DESAPW00.K50,
                   PU          = HOST3090


* LOGMODE

 XMODE     LU62INDP,
               SESS-MAX    = 200,
                   SESS-LOS    = 0,
                   SESS-WIN    = 200,
                   SESS-AUTO   = 0,
                   PAC-SEND    = 8,
                   PAC-RCV     = 8,
                   SRU-MAX     = 88,
                   RRU-MAX     = 88

* Local partner program for connection from R/2

 XTP       GWHSTC11,
                   PATH      = /usr/sap/C11/SYS/exe/run/GWHSTC11,
                   UID       = cuaadm,
```

SNA Configuration for Independent LU6.2

```
                    TYP       = USER,
                    SECURE    = NO

 XTP       CCPICT2S,
                    PATH      = /usr/sap/C11/SYS/exe/run/ccpict2s,
                    UID       = cuaadm,
                    TYP       = USER,
                    SECURE    = NO


* Side-Info data

 XSYMDEST  K50,
                    RLU         = K50CICS,
                    MODE        = LU62INDP,
                    TP          = X1SA,
                    TP-TYP      = USER,
                    SEC-TYP     = NONE


 XEND
```

Sun Workstation Configuration

The configuration on a Sun workstation is explained with the help of the following examples:

SAP Configuration [Seite 292]

SNA Configuration for Dependent LU6.2 [Seite 293]

SNA Configuration for Independent LU6.2 [Seite 298]

SAP Configuration

CUA Interface

Not yet available.

R/2-R/3 Connections

Not yet available.

External Programs

Not yet available.

Example Sideinfo File

Not yet available.

Example TXCOM Entry

```
Dest     LU        TP                Prot  Gateway-Host Gateway-Serv

K50                                  C     uw1tr2        sapgw00
EXT_SUN  uw1tr2    /usr/sap/C11/..   E     uw1tr2        sapgw00
```

(The full TP path is: /usr/sap/C11/SYS/exe/run/ccpict2t)

Example XCOM entry:

```
Maintain ATAB table   XCOM  Table of the symbolic destinations for CPI-
C
-------------------------------------------------------------------
Symbolic dest.      LU (Logical Unit)  TP (Transaction prog.) Comm.Type
-------------------------------------------------------------------
C11                     MRB1               GWHSTC11
EXT_SUN                 MRB2               CCPICT2S                _
```

SNA Configuration for Dependent LU6.2

Example With 3 LUs to an R/2 System

```
:DEFINE_PU:
pu_name = PTRMRB, network_name = DESAPW00, contents_id = 01234567
:DEFINE_NODE:
pu_name = PTRMRB; node_id = PTRMRB
# node_id must match with the CP name
# XID must be zero ! (see below)

#*****************************************************************

:DEFINE_TP:
tp_name              = GWHSTC11
tp_path              = /usr/sap/C11/SYS/exe/run/GWHSTC11
sync_level           = SYNC_NONE

#*****************************************************************

:DEFINE_TP:
tp_name              = IMSASYNC
tp_path              = /usr/sap/C11/SYS/exe/run/IMSASYNC
sync_level           = SYNC_NONE

#*****************************************************************

:DEFINE_TP:
tp_name              = CCPICT2S
tp_path              = /usr/sap/C11/SYS/exe/run/ccpict2s
sync_level           = SYNC_NONE

#*****************************************************************
#*****************************************************************

:DEFINE_LOCAL_LU:
fql_lu_name      = DESAPW00.LTRMMRB1
lu_local_address = 1
lu_name          = LTRMMRB1
lu_session_limit = 1
:DEFINE_PARTNER_LU:
fql_plu_name     = DESAPW00.K50
u_plu_name       = K50
parallel_session = no
lu_is_dependent    = yes
initiate_type    = INITIATE_ONLY

:DEFINE_MODE:
mode_name            = LU62CPIC
unique_session_name  = K5001
snd_pac_window       = 8
rcv_pac_window       = 8
```

SNA Configuration for Dependent LU6.2

```
snd_max_ru_size      = 2048
rcv_max_ru_size      = 2048
sync_level           = sync_confirm
sess_reinit          = INIT_OPERATOR
auto_activate_limit  = 0
session_limit        = 1        #must set to this value
min_conwinner_limit  = 1
min_conloser_limit   = 0

#*****************************************************************
:DEFINE_PARTNER_LU:
fql_plu_name     = DESAPW00.APPCBRDG
u_plu_name       = APPCBRDG
parallel_session = no
lu_is_dependent    = yes
initiate_type    = INITIATE_ONLY

:DEFINE_MODE:
mode_name            = LU62CPIC
unique_session_name  = K5IMS01
snd_pac_window       = 8
rcv_pac_window       = 8
snd_max_ru_size      = 2048
rcv_max_ru_size      = 2048
sync_level           = sync_confirm
sess_reinit          = INIT_OPERATOR
auto_activate_limit  = 0
session_limit        = 1        #must set to this value
min_conwinner_limit  = 1
min_conloser_limit   = 0


#*****************************************************************
#*****************************************************************

:DEFINE_LOCAL_LU:
fql_lu_name      = DESAPW00.LTRMMRB2
lu_local_address = 2
lu_name          = LTRMMRB2
lu_session_limit = 1
:DEFINE_PARTNER_LU:
fql_plu_name     = DESAPW00.K50
u_plu_name       = K50
parallel_session = no
lu_is_dependent    = yes
initiate_type    = INITIATE_ONLY

:DEFINE_MODE:
mode_name            = LU62CPIC
unique_session_name  = K5002
snd_pac_window       = 8
rcv_pac_window       = 8
snd_max_ru_size      = 2048
```

```
rcv_max_ru_size      = 2048
sync_level           = sync_confirm
sess_reinit          = INIT_OPERATOR
auto_activate_limit  = 0
session_limit        = 1        #must set to this value
min_conwinner_limit  = 1
min_conloser_limit   = 0

#*****************************************************************
:DEFINE_PARTNER_LU:
fql_plu_name     = DESAPW00.APPCBRDG
u_plu_name       = APPCBRDG
parallel_session = no
lu_is_dependent    = yes
initiate_type    = INITIATE_ONLY

:DEFINE_MODE:
mode_name            = LU62CPIC
unique_session_name  = K5IMS02
snd_pac_window       = 8
rcv_pac_window       = 8
snd_max_ru_size      = 2048
rcv_max_ru_size      = 2048
sync_level           = sync_confirm
sess_reinit          = INIT_OPERATOR
auto_activate_limit  = 0
session_limit        = 1        #must set to this value
min_conwinner_limit  = 1
min_conloser_limit   = 0


#*****************************************************************
#*****************************************************************

:DEFINE_LOCAL_LU:
fql_lu_name      = DESAPW00.LTRMMRB3
lu_local_address = 3
lu_name          = LTRMMRB3
lu_session_limit = 1
:DEFINE_PARTNER_LU:
fql_plu_name     = DESAPW00.K50
u_plu_name       = K50
parallel_session = no
lu_is_dependent    = yes
initiate_type    = INITIATE_ONLY

:DEFINE_MODE:
mode_name            = LU62CPIC
unique_session_name  = K5003
snd_pac_window       = 8
rcv_pac_window       = 8
snd_max_ru_size      = 2048
rcv_max_ru_size      = 2048
```

SNA Configuration for Dependent LU6.2

```
sync_level           = sync_confirm
sess_reinit          = INIT_OPERATOR
auto_activate_limit  = 0
session_limit        = 1        #must set to this value
min_conwinner_limit  = 1
min_conloser_limit   = 0

#*****************************************************************
:DEFINE_PARTNER_LU:
fql_plu_name     = DESAPW00.APPCBRDG
u_plu_name       = APPCBRDG
parallel_session = no
lu_is_dependent    = yes
initiate_type    = INITIATE_ONLY

:DEFINE_MODE:
mode_name            = LU62CPIC
unique_session_name  = K5IMS03
snd_pac_window       = 8
rcv_pac_window       = 8
snd_max_ru_size      = 2048
rcv_max_ru_size      = 2048
sync_level           = sync_confirm
sess_reinit          = INIT_OPERATOR
auto_activate_limit  = 0
session_limit        = 1        #must set to this value
min_conwinner_limit  = 1
min_conloser_limit   = 0


#*****************************************************************
:DEFINE_DLC:
dlc_name          = DLC0
dlc_driver_name         = /dev/llc2
port_driver_name  = tr0
dlc_type          = llc     # SDLC data link
npr_timeout       = 200     # seconds
pause_timeout           = 2       # ms
idle_timeout            = 1400    # 7 seconds, for frm_size 529, 4800
bps
maxdata                 = 2048    # MAXDATA value
window_size       = 7
retries                 = 3
local_sap                = 04
sdlc_addr         = 0x40
full_duplex       = no
nrzi              = no
multipoint        = no
switched_line           = yes

block_number            = 000       # MUST be first of xid parameters
id_number         = 00000
role              = negotiable    # or primary, negotiable
```

```
tx_rx_capability  = alternating     # or simultaneous
max_rcv_iframe_size     = 7
include_control_point   = yes # xid control vector
xtwait                   = 10

include_link_station_name     = no  # xid control vector
linkid                   = 1

#
1234567890123456789012345678901234567890123456789 0
# product_set_id     = 161101130011f9f4f0f4c3f1f0f1f9f9f9f9f9f9f9f9
# product set id:product identifier (ibm h/w):hw product identifier
(serial#)

#*****************************************************************
:DEFINE_ALS:
dlc_name        = DLC0
pu_name         = PTRMRB
als_name        = ALS0
remote_mac_addr = 400072A3FFFF
remote_sap      = 04

#*****************************************************************
:DB_MSG:
db_pc             = no  # yes
db_mail           = no
db_buf                  = no
db_dev                  = yes  # yes
db_api_verb             = yes  # yes
db_character_set  = EBCDIC
db_record_size          = long
file_mode         = create
file_name         = '/tmp/p2plog'
db_tp_info        = no
db_max_trc_sz           = 1  # 0 = unlimited (in MB)
```

SNA Configuration for Independent LU6.2

Independent LU6.2 is not supported by SunLink SNA.

R/2 - R/3 Connections With R/2 on SNI (BS2000) Host

Host Configuration

See the separate documentation for the host gateway.

Workstation Configuration

Not yet available.

SAP Configuration

Not yet available.

CUA Interface

R/2 - R/3 Connections

External Programs

Example Sideinfo File:

Example TXCOM Entry

Example XCOM Entry